Engine parts from Torrsen Marine - www.torresen.com - 231-759-8596

PARTS LIST

Universal

MARINE DIESEL ENGINE

M-25XPB

M-35B

M-40B

PUBLICATION NO. 201021
1ST Edition
December 2001

Universal
MARINE POWER

WESTERBEKE CORPORATION MYLES STANDISH INDUSTRIAL PARK
150 JOHN HANCOCK ROAD TAUNTON, MA 02780-7319 U.S.A.
WEBSITE: WWW.WESTERBEKE.COM

NMMA Member National Marine Manufacturers Association

Engine parts from Torrsen Marine - www.torresen.com - 231-759-8596

Engine parts from Torrsen Marine - www.torresen.com - 231-759-8596

IMPORTANT

Product Software Disclaimer

Product software of all kinds, such as brochures, drawing, technical data, operator's and workshop manuals, parts lists and parts price lists, and other information, instructions and specifications provided from sources other than Westerbeke, is not within Westerbeke's control and; accordingly, is provided to Westerbeke customers only as a courtesy and service. Westerbeke cannot be responsible for the content of such software, makes no warranties or representations with respect thereto, including the accuracy, timeliness or completeness thereof, and will in no event be liable for any type of damages or injury incurred in connection with, or arising out of, the furnishing or use of such software.

For example, components and subassemblies incorporated in Westerbeke's products and supplied by others(such as engine blocks, fuel systems and components, transmissions, electrical components, pumps and other products) are generally supported by their manufacturers with their own software, and Westerbeke must depend on such software for the design of Westerbeke's own product software. Such software may be outdated and no longer accurate. Routine changes made by Westerbeke's suppliers, of which Westerbeke rarely has notice in advance, are frequently not reflectedin the supplier's software until after such changes take place.

Westerbeke customers should also keep in mind the time span between printings of Westerbeke product software and the unavoidable existence of earlier, non-current, Westerbeke software editions in the field. Additionally, most Westerbeke products include customer-requested special features that frequently do not include complete documentation.

In summation, product software provided with Westerbeke products, whether from Westerbeke or other suppliers, must not and cannot be relied upon exclusively as the definitive authority on the respective product. It not only makes good sense but is imperitive that appropriate representatives of Westerbeke or the supplier in question be consulted to determine the accuracy and currency of the product software being consulted by the customer.

Engine parts from Torrsen Marine - www.torresen.com - 231-759-8596

Engine parts from Torrsen Marine - www.torresen.com - 231-759-8596

Table of Contents

M-25XPB M-35B M-40B
UNIVERSAL DIESEL ENGINES - B SERIES

Model	Model Type	KW	Fuel	Frequency
M-25XPB	Propulsion		Diesel	
M-35B	Propulsion		Diesel	
M-40B	Propulsion		Diesel	

Page	Description
1	CYLINDER BLOCK ASSEMBLY - M-25XPB
3	CYLINDER BLOCK ASSEMBLY - M-35B / M-40B
5	OIL PAN ASSEMBLY, OIL PRESSURE SWITCH - M-25XPB
7	OIL PAN ASSEMBLY, OIL PRESSURE SWITCH - M-35B / M-40B
9	CYLINDER HEAD ASSEMBLY - M-25XPB
11	CYLINDER HEAD ASSEMBLY - M-35B / M-40B
13	GEAR CASE ASSEMBLY - M-25XPB / M-35B / M-40B
15	PISTONS, CRANKSHAFT AND MAIN BEARINGS - M-25XPB
17	PISTONS, CRANKSHAFT AND MAIN BEARINGS - M-35B / M-40B
19	PISTONS, CRANKSHAFT AND MAIN BEARINGS - M-35B / M-40B
21	VALVE HEAD COVER AND AIR INTAKE MANIFOLD - M-25XPB
23	VALVE HEAD COVER AND AIR INTAKE MANIFOLD - M-35B / M-40B
25	EXHAUST MANIFOLD AND HEAT EXCHANGER - M-25XPB/ M-35B/ M-40B
27	FUEL FILTER, NOZZLE HOLDERS AND INJECTORS - M-25XPB
29	FUEL FILTER, NOZZLE HOLDERS AND INJECTORS - M-35B / M-40B
31	FUEL CAMSHAFT AND GOVERNOR SHAFT - M-25XPB
33	FUEL CAMSHAFT AND GOVERNOR SHAFT - M-35B / M-40B
35	VALVES, ROCKER ARMS AND CAMSHAFTS - M-25XPB
37	VALVES, ROCKER ARMS AND CAMSHAFTS - M-35B / M-40B
39	THROTTLE AND GOVERNOR ASSEMBLIES
41	THROTTLE AND GOVERNOR ASSEMBLIES
43	FUEL LIFT PUMP, SOLENOID AND FUEL RETURN
45	FRESH WATER COOLING SYSTEM
47	FRESH WATER COOLING SYSTEM
49	RAW WATER PUMP
51	BELL HOUSING AND TRANSMISSION
53	BELL HOUSING AND TRANSMISSION
55	MODEL HBW VERTICAL SHIFTING BRACKET
57	ALTERNATOR ASSEMBLY
59	ELECTRICAL SYSTEM
61	PROPULSION INSTRUMENT PANELS
63	NOTES
64	MISCELLANEOUS
65	NUMERICAL INDEX

Engine parts from Torrsen Marine - www.torresen.com - 231-759-8596

Engine parts from Torrsen Marine - www.torresen.com - 231-759-8596

CYLINDER BLOCK ASSEMBLY - M-25XPB

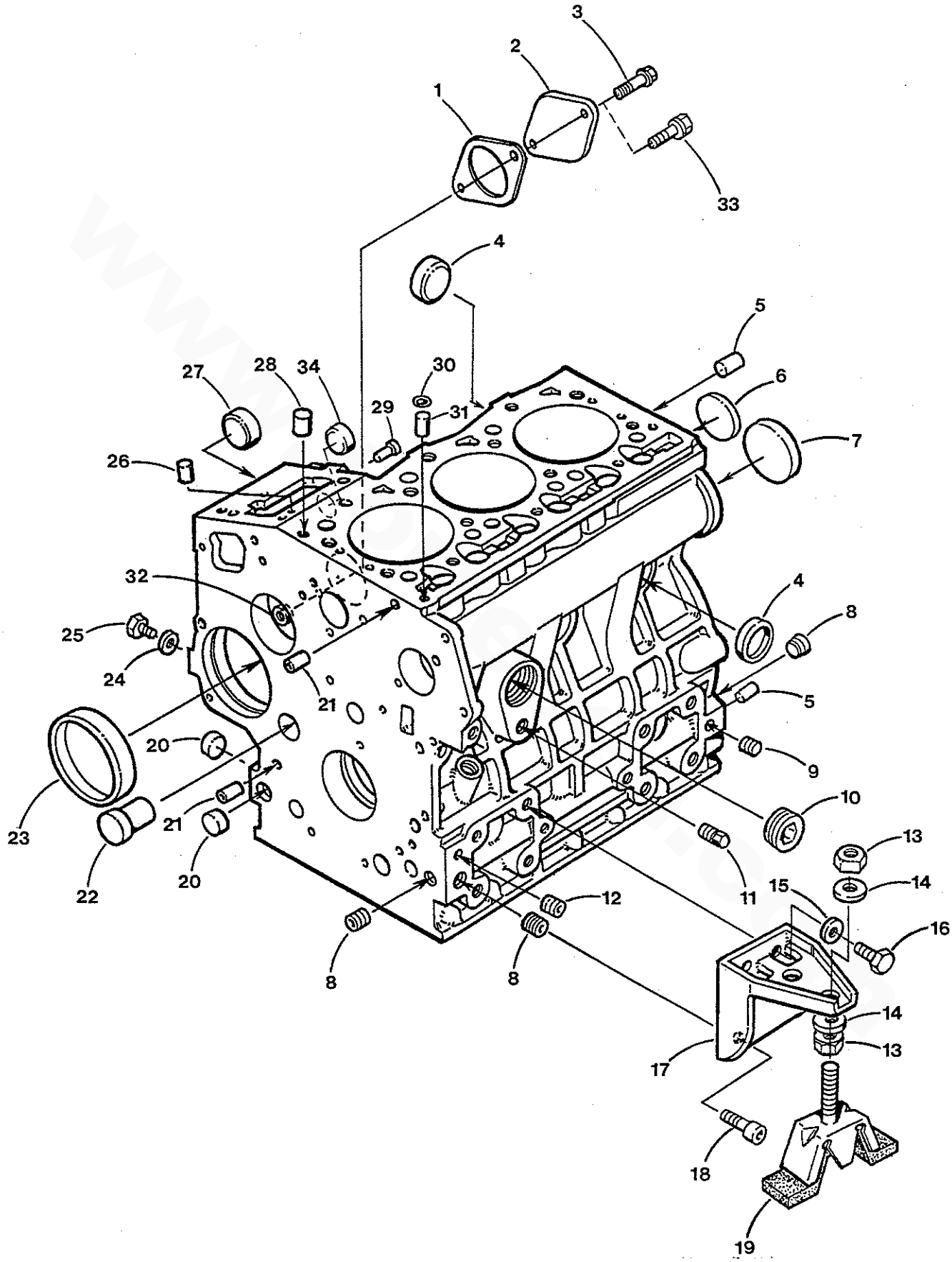

Engine parts from Torrsen Marine - www.torresen.com - 231-759-8596

Engine parts from Torrsen Marine - www.torresen.com - 231-759-8596

CYLINDER BLOCK ASSEMBLY - M-25XPB

Reference #	Part #	Part Name	Remarks	Quantity
1	200916	GASKET	PUMP COVER	1
2	200905	COVER	PUMP	1
3-1	017196	CAPSCREW	M 8 X 20 DIN 933	1
3-2	031786	LOCKWASHER	M 8 DIN 127	1
4	301201	PLUG	EXPANSION	4
5	299360	DOWEL		2
6	299355	PLUG	EXPANSION	1
7	200896	PLUG	EXPANSION	1
8	200835	PLUG		3
9	302589	PLUG		3
10	200956	PLUG		1
11	013341	PLUG	1/4 NPT HEX HEAD (BRASS)	1
12	302587	PLUG		2
13	040966	NUT	JAM M 16, SELF-LOCKING	2
14	031828	WASHER	FLAT, 5/8 SAE (STEEL)	2
15	019262	LOCKWASHER	M 10 DIN 127	4
16	024951	CAPSCREW	M 10 X 1.25 X 20 DIN 961	4
17	200435	MOUNT	FRONT	2
18	200442	CAPSCREW	M 10 X 1.25 X 20 DIN 7991	4
19	040510	ISOLATOR	MARINE 75-130 LB.	2
20	200978	PLUG	EXPANSION	3
21	300716	DOWEL	TUBULAR	2
22	200906	PLUG		1
23	200885	BUSHING	GOVERNOR GEAR	1
24	298659	GASKET		1
25	298658	PLUG		1
26	301543	DOWEL		2
27	200837	PLUG		1
28	200636	DOWEL		2
29	200854	PIN	START SPRING	1
30	299362	O-RING		1
31	200797	DOWEL	TUBULAR	1
32	301297	NUT	M 8 SELF-LOCKING	1
33	301729	CAPSCREW	M 8 X 32 JIS 7 W/LW	1
34	200641	PLUG	EXPANSION	1
35	200456	BLOCK	ASSEMBLY INCL. HEAD - M-25XPB	1

Engine parts from Torrsen Marine - www.torresen.com - 231-759-8596

Engine parts from Torrsen Marine - www.torresen.com - 231-759-8596

CYLINDER BLOCK ASSEMBLY - M-35B / M-40B

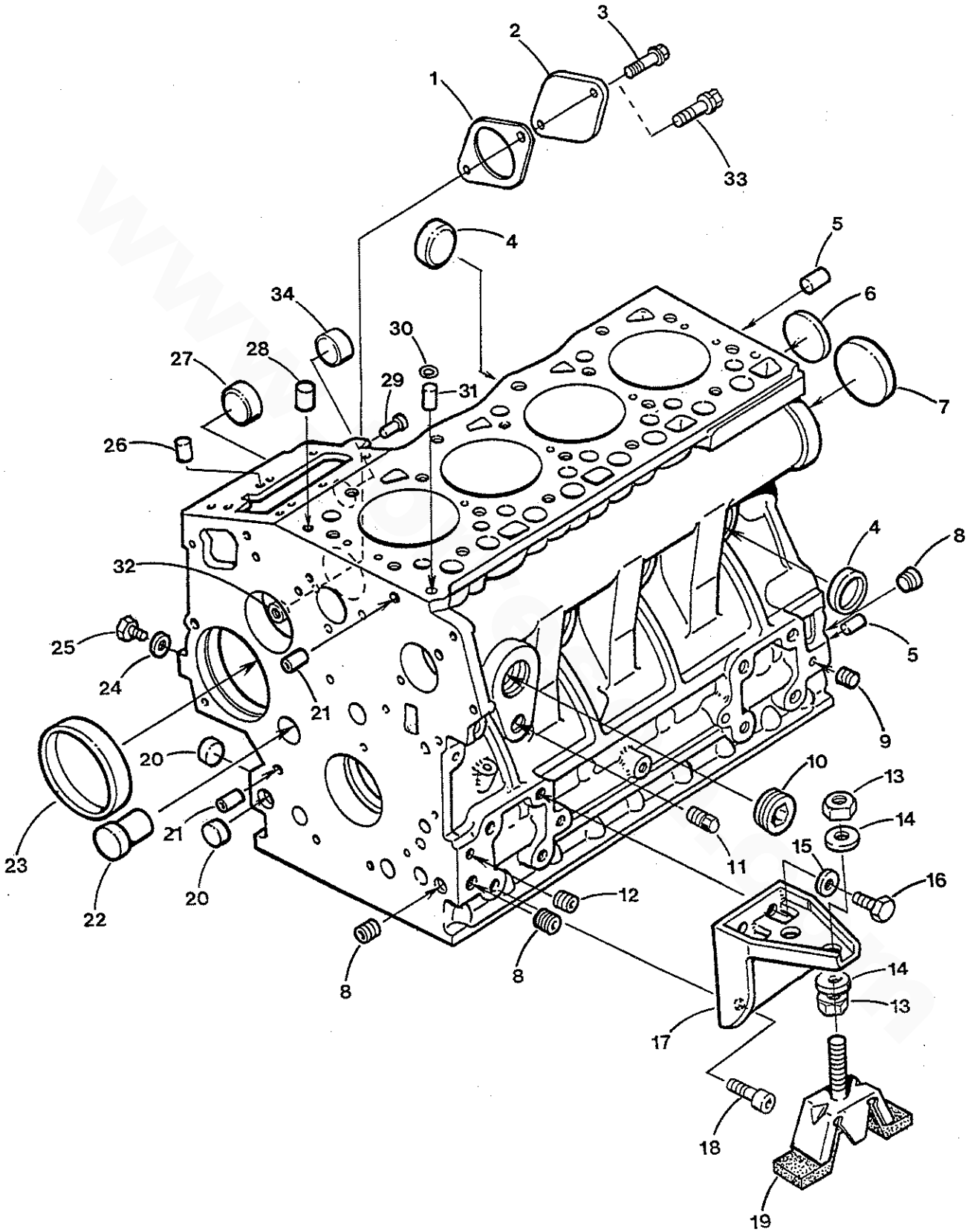

Engine parts from Torrsen Marine - www.torresen.com - 231-759-8596

Engine parts from Torrsen Marine - www.torresen.com - 231-759-8596

CYLINDER BLOCK ASSEMBLY - M-35B / M-40B

Reference #	Part #	Part Name	Remarks	Quantity
1	200916	GASKET	PUMP COVER	1
2	200905	COVER	PUMP	1
3-1	017196	CAPSCREW	M 8 X 20 DIN 933	2
3-2	031786	LOCKWASHER	M 8 DIN 127	2
4	301201	PLUG	EXPANSION	6
5	200725	DOWEL		2
6	299355	PLUG	EXPANSION	1
7	200896	PLUG	EXPANSION	1
8	200835	PLUG		3
9	302589	PLUG		4
10	200956	PLUG		1
11	013341	PLUG	1/4 NPT HEX HEAD (BRASS)	1
12	302587	PLUG		2
13	040966	NUT	JAM M 16, SELF-LOCKING	2
14	031828	WASHER	FLAT, 5/8 SAE (STEEL)	2
15	019262	LOCKWASHER	M 10 DIN 127	4
16	024951	CAPSCREW	M 10 X 1.25 X 20 DIN 961	4
17	200435	MOUNT	FRONT	2
18	200442	CAPSCREW	M 10 X 1.25 X 20 DIN 7991	4
19	040510	ISOLATOR	MARINE 75-130 LB.	2
20	200978	PLUG	EXPANSION	3
21	300716	DOWEL	TUBULAR	2
22	200906	PLUG		1
23	200885	BUSHING	GOVERNOR GEAR	1
24	298659	GASKET		1
25	298658	PLUG		1
26	200729	DOWEL		2
27	200837	PLUG		1
28	200724	DOWEL		2
29	200722	PIN	START SPRING	1
30	299362	O-RING		1
31	200797	DOWEL	TUBULAR	1
32	301297	NUT	M 8 SELF-LOCKING	1
33	301729	CAPSCREW	M 8 X 32 JIS 7 W/LW	1
34	200641	PLUG	EXPANSION	1
35-1	200457	BLOCK	ASSEMBLY INCL. HEAD - M-35B	1
35-2	201028	BLOCK	ASSEMBLY INCL .HEAD - M-40B	1

Engine parts from Torrsen Marine - www.torresen.com - 231-759-8596

Engine parts from Torrsen Marine - www.torresen.com - 231-759-8596

OIL PAN ASSEMBLY, OIL PRESSURE SWITCH - M-25XPB

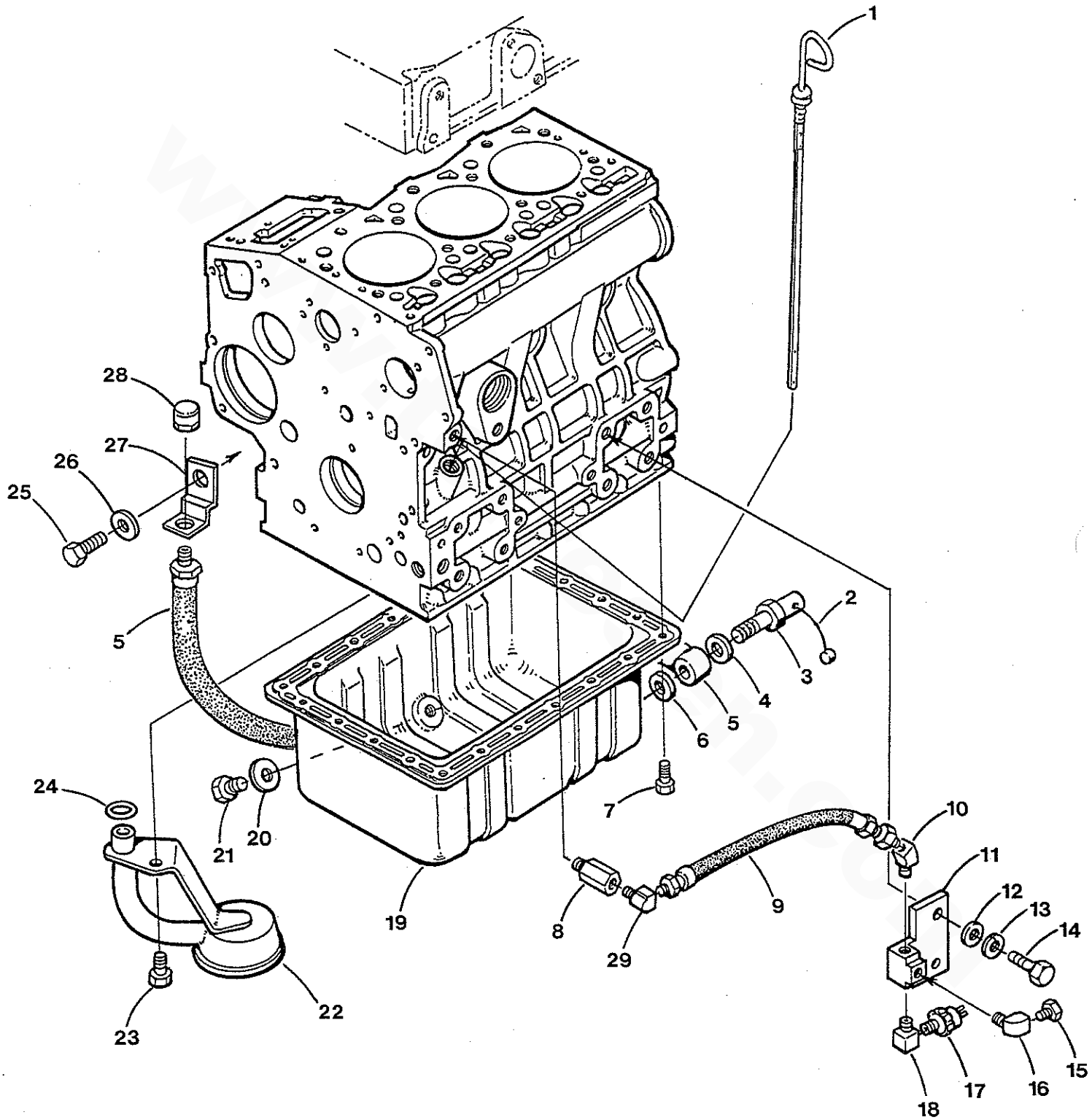

Engine parts from Torrsen Marine - www.torresen.com - 231-759-8596

Engine parts from Torrsen Marine - www.torresen.com - 231-759-8596

OIL PAN ASSEMBLY, OIL PRESSURE SWITCH - M-25XPB

Reference #	Part #	Part Name	Remarks	Quantity
1	200901	DIPSTICK		1
2	037393	SEAL	LEAD WIRE	1
3	036823	BOLT	BANJO-SUMP M 12 X 1.25	1
4	036493	WASHER		1
5	030848	HOSE	SUMP DRAIN 24 INCH	1
6	036647	WASHER		1
7	035785	CAPSCREW	M 6 X 12 JIS 6 W/LW	22
8	024844	ADAPTER	1/8 BSPT TO 1/8 NPT	1
9	039385	HOSE	OIL	1
10	015122	ELBOW	1/8NPT TO 45 DEG STREET (STEEL)	1
11	032480	BRACKET	OIL PRESSURE SENDER	1
12	031789	WASHER	M 10 DIN 125	1
13	019262	LOCKWASHER	M 10 DIN 127	2
14	024951	CAPSCREW	M 10 X 1.25 X 20 DIN 961	2
15	019369	PLUG	HEX HEAD, 1/8 NPT (BRASS)	1
16	015122	ELBOW	1/8NPT TO 45 DEG STREET (STEEL)	1
17	037323	SWITCH	OIL PRESSURE, NO. 5	1
18	013340	ELBOW	1/8 NPT 90 DEG STREET (BRASS)	1
19	201003	SUMP	OIL	1
20	299371	GASKET	DRAIN PLUG	1
21	298660	PLUG	DRAIN	1
22	201041	STRAINER	OIL PICK-UP	1
23-1	016789	CAPSCREW	M 8 X 16 DIN 933	1
23-2	031786	LOCKWASHER	M 8 DIN 127	1
24	299967	O-RING		1
25-1	035789	CAPSCREW	M 6 X 45 JIS 6 W/LW	1
25-2	013629	CAPSCREW	M 10 X 25 DIN 933 - V-DRIVE OPTION	1
26	031753	WASHER	FLAT, 1/4" SAE (STEEL)	1
27	024922	BRACKET	SUMP DRAIN HOSE	1
28	024905	CAP	1/4 NPT (BRASS)	1
29	013340	ELBOW	1/8 NPT 90 DEG STREET (BRASS)	1

Engine parts from Torrsen Marine - www.torresen.com - 231-759-8596

Engine parts from Torrsen Marine - www.torresen.com - 231-759-8596

OIL PAN ASSEMBLY, OIL PRESSURE SWITCH - M-35B / M-40B

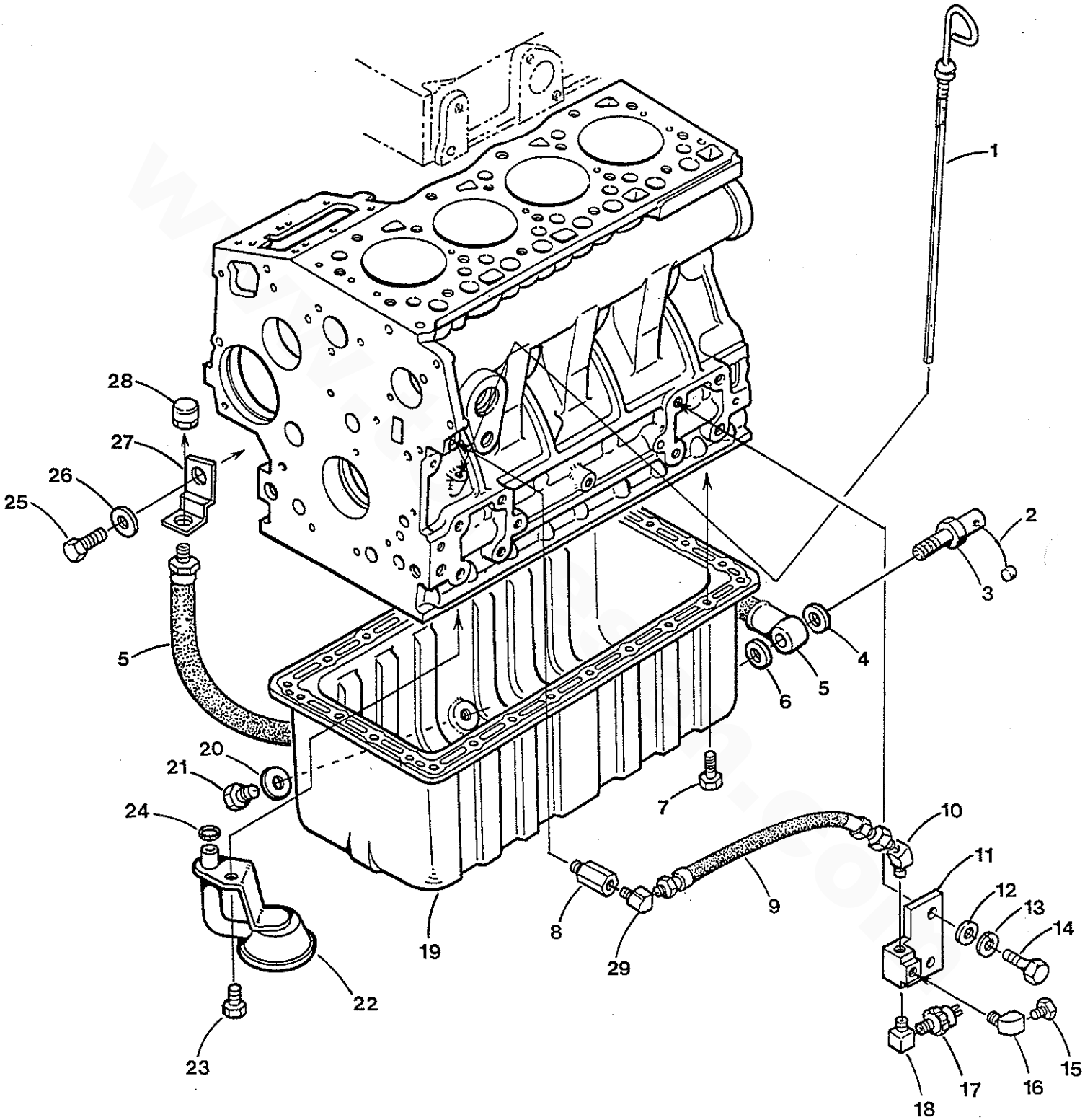

Engine parts from Torrsen Marine - www.torresen.com - 231-759-8596

Engine parts from Torrsen Marine - www.torresen.com - 231-759-8596

OIL PAN ASSEMBLY, OIL PRESSURE SWITCH - M-35B / M-40B

Reference #	Part #	Part Name	Remarks	Quantity
1	200728	DIPSTICK		1
2	037393	SEAL	LEAD WIRE	1
3	036823	BOLT	BANJO-SUMP M 12 X 1.25	1
4	036493	WASHER	1.00 OD X 0.708 ID	1
5	030848	HOSE	SUMP DRAIN 24 INCH	1
6	036647	WASHER	1.00 OD X 0.473 ID	1
7	035785	CAPSCREW	M 6 X 12 JIS 6 W/LW	26
8	024844	ADAPTER	1/8 BSPT TO 1/8 NPT	1
9	039385	HOSE	OIL	1
10	015122	ELBOW	1/8NPT TO 45 DEG STREET (STEEL)	1
11	032480	BRACKET	OIL PRESSURE SENDER	1
12	031789	WASHER	M 10 DIN 125	2
13	019262	LOCKWASHER	M 10 DIN 127	2
14	024951	CAPSCREW	M 10 X 1.25 X 20 DIN 961	2
15	019369	PLUG	HEX HEAD, 1/8 NPT (BRASS)	1
16	015122	ELBOW	1/8NPT TO 45 DEG STREET (STEEL)	1
17	037323	SWITCH	OIL PRESSURE, NO. 5	1
18	013340	ELBOW	1/8 NPT 90 DEG STREET (BRASS)	1
19	201004	SUMP	OIL	1
20	201008	GASKET	SUMP	1
21	298660	PLUG	DRAIN	1
22	200900	STRAINER	OIL PICK-UP	1
23-1	016789	CAPSCREW	M 8 X 16 DIN 933	1
23-2	031786	LOCKWASHER	M 8 DIN 127	1
24	200632	O-RING		1
25-1	035789	CAPSCREW	M 6 X 45 JIS 6 W/LW	1
25-2	013629	CAPSCREW	M 10 X 25 DIN 933 - V-DRIVE OPTION	1
26	031753	WASHER	FLAT, 1/4" SAE (STEEL)	1
27	024922	BRACKET	SUMP DRAIN HOSE	1
28	024905	CAP	1/4 NPT (BRASS)	1
29	013340	ELBOW	1/8 NPT 90 DEG STREET (BRASS)	1

Engine parts from Torrsen Marine - www.torresen.com - 231-759-8596

Engine parts from Torrsen Marine - www.torresen.com - 231-759-8596

CYLINDER HEAD ASSEMBLY - M-25XPB

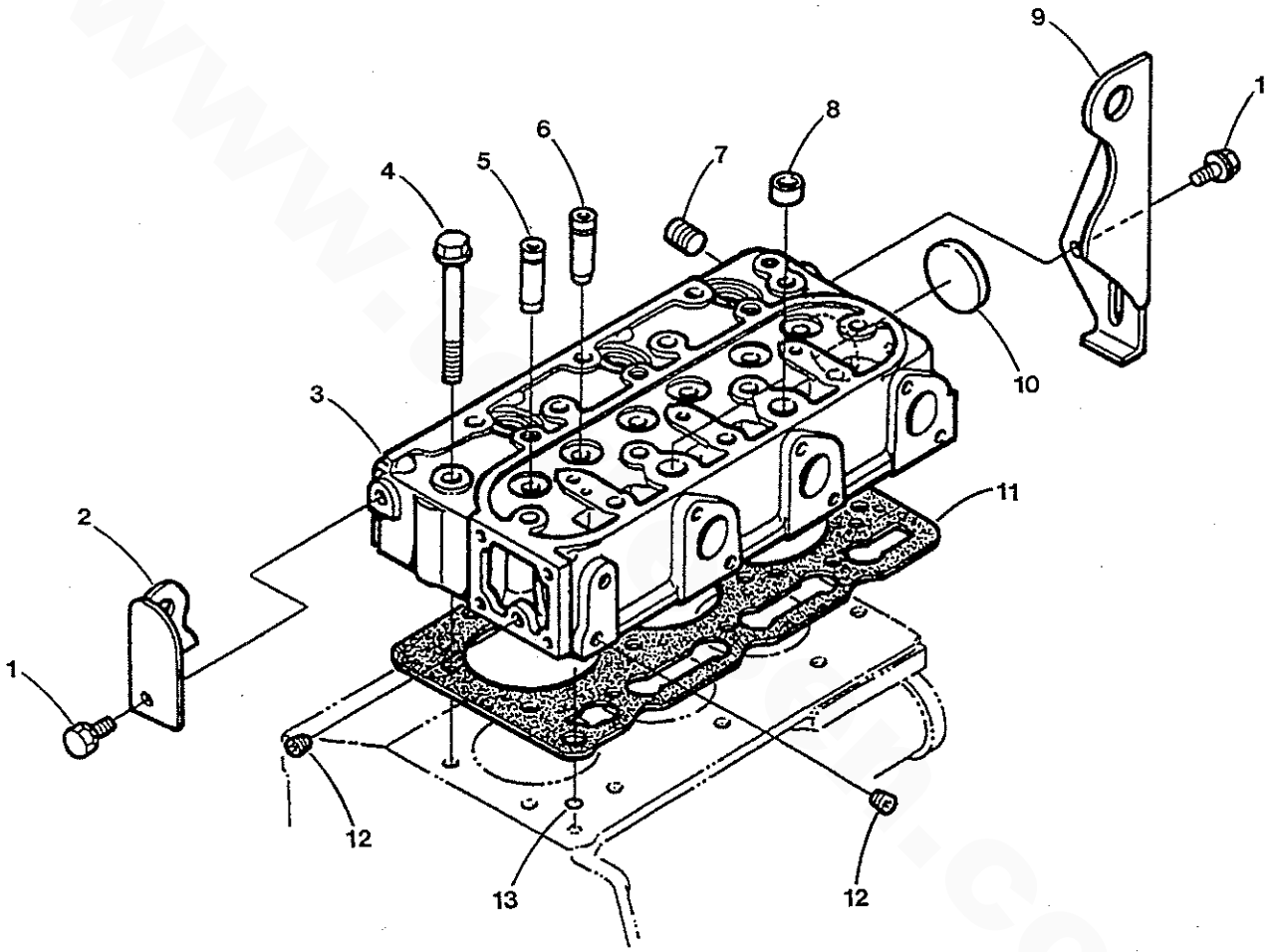

Engine parts from Torrsen Marine - www.torresen.com - 231-759-8596

Engine parts from Torrsen Marine - www.torresen.com - 231-759-8596

CYLINDER HEAD ASSEMBLY - M-25XPB

Reference #	Part #	Part Name	Remarks	Quantity
1-1	016789	CAPSCREW	M 8 X 16 DIN 933	2
1-2	031786	LOCKWASHER	M 8 DIN 127	2
2	301549	EYE	LIFTING	1
3	200697	HEAD	CYLINDER	1
4	200735	BOLT	CYLINDER HEAD	14
5	200753	GUIDE	INTAKE VALVE	3
6	200754	GUIDE	EXHAUST VALVE	3
7	301550	PLUG		1
8	302690	PLUG	EXPANSION	2
9	200734	EYE	LIFTING	1
10	299906	PLUG	EXPANSION 30MM DIN 443 BRASS	1
11	200731	GASKET	CYLINDER HEAD	1
12	302593	PLUG		2
13	299362	O-RING		1

www.torresen.com

Engine parts from Torrsen Marine - www.torresen.com - 231-759-8596

Engine parts from Torrsen Marine - www.torresen.com - 231-759-8596

CYLINDER HEAD ASSEMBLY - M-35B / M-40B

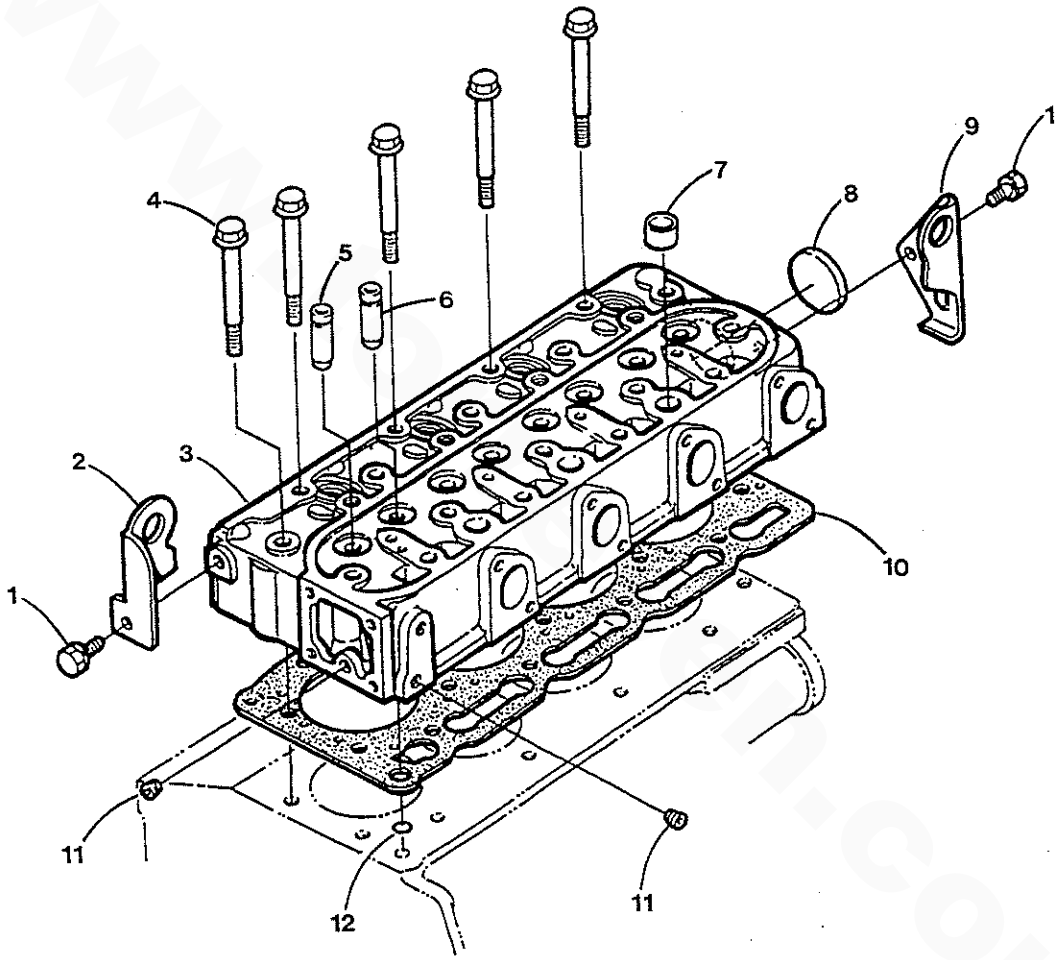

Engine parts from Torrsen Marine - www.torresen.com - 231-759-8596

Engine parts from Torrsen Marine - www.torresen.com - 231-759-8596

CYLINDER HEAD ASSEMBLY - M-35B / M-40B

Reference #	Part #	Part Name	Remarks	Quantity
1-1	016789	CAPSCREW	M 8 X 16 DIN 933 W/LW	2
1-2	031786	LOCKWASHER	M 8 DIN 127	2
2	200733	EYE	LIFTING	1
3-1	200709	HEAD	CYLINDER - M-35B	1
3-2	200712	HEAD	CYLINDER - M-40B	1
4	200735	BOLT	CYLINDER HEAD	18
5	200753	GUIDE	INTAKE VALVE	4
6	200754	GUIDE	EXHAUST VALVE	4
7	302690	PLUG	EXPANSION	3
8	299906	PLUG	EXPANSION 30MM DIN 443 BRASS	1
9	200734	EYE	LIFTING	1
10-1	200867	GASKET	CYLINDER HEAD - M-35B	1
10-2	200910	GASKET	CYLINDER HEAD - M-40B	1
11	302593	PLUG		2
12	299362	O-RING		1

www.torresen.com

Engine parts from Torrsen Marine - www.torresen.com - 231-759-8596

Engine parts from Torrsen Marine - www.torresen.com - 231-759-8596

GEAR CASE ASSEMBLY - M-25XPB / M-35B / M-40B

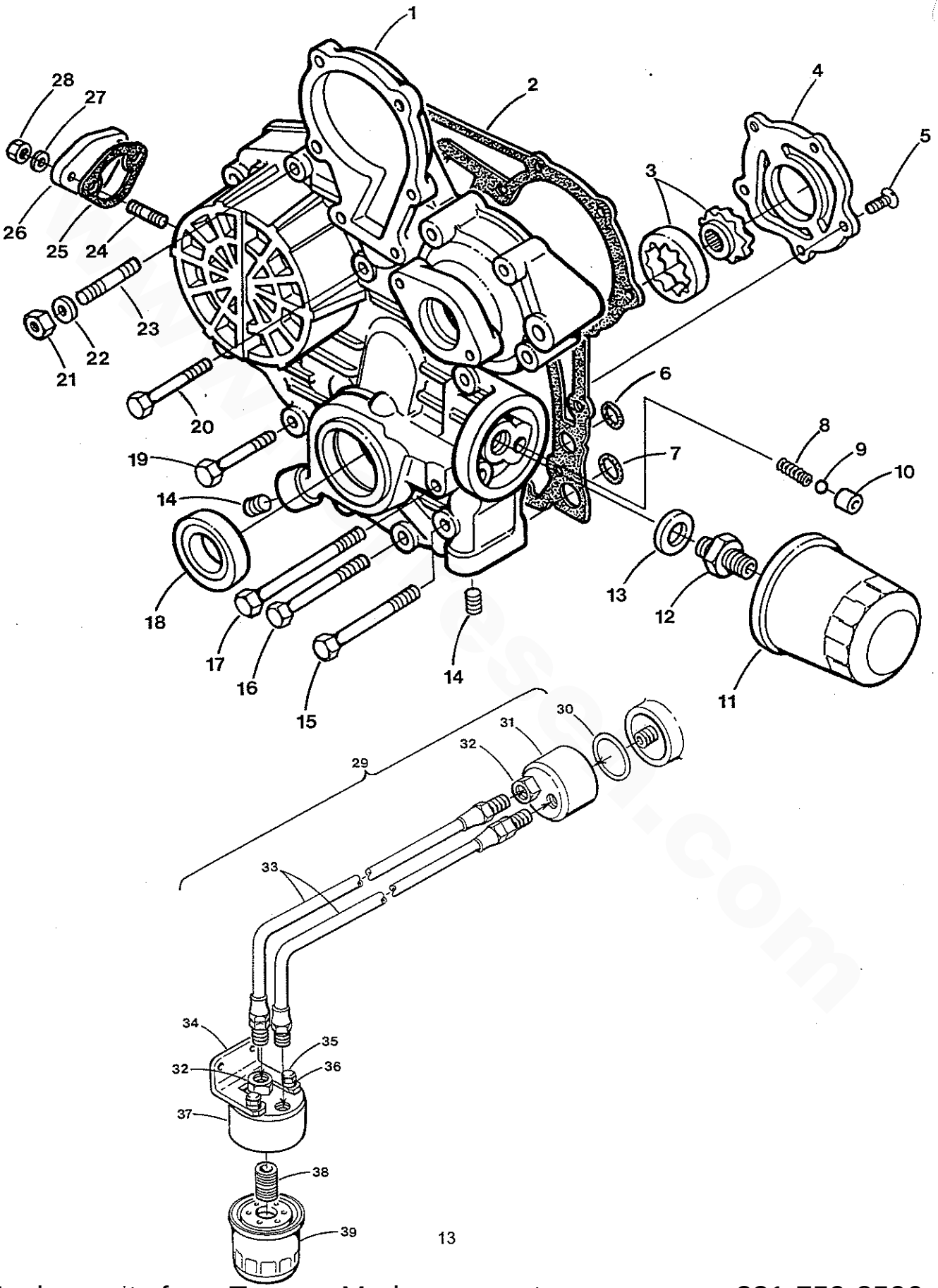

Engine parts from Torrsen Marine - www.torresen.com - 231-759-8596

Engine parts from Torrsen Marine - www.torresen.com - 231-759-8596

GEAR CASE ASSEMBLY - M-25XPB / M-35B / M-40B

Reference #	Part #	Part Name	Remarks	Quantity
1	200868	ASSEMBLY	GEAR CASE	1
2	200858	GASKET	GEAR CASE	1
3	200798	PUMP	OIL	1
4	200799	COVER	OIL PUMP	1
5	200832	SCREW	OIL PUMP COVER	5
6-1	298738	O-RING	M-25XPB	2
6-2	200633	O-RING	M-35B / M-40B	2
7-1	299559	O-RING	M-25XPB	2
7-2	200631	O-RING	M-35B / M-40B	2
8	200802	SPRING	OIL RELIEF VALVE	1
9	200642	BALL		1
10	200801	CAP	OIL RELIEF VALVE	1
11	300209	FILTER	OIL	1
12	301490	ADAPTER	OIL FILTER	1
13	032175	WASHER	FLAT M 18	1
14	200836	PLUG		2
15-1	030146	CAPSCREW	M 6 X 55 DIN 931	2
15-2	031783	LOCKWASHER	M 6 DIN 127	2
16-1	300330	CAPSCREW	M 6 X 50 DIN 931	6
16-2	031783	LOCKWASHER	M 6 DIN 127	6
17	200830	BOLT	TIMING CASE	1
18	200737	SEAL	OIL	1
19	200689	BOLT	TIMING CASE	1
20	035789	CAPSCREW	M 6 X 45 JIS 6 W/LW	3
21	015812	NUT	M 6 DIN 934	1
22	031783	LOCKWASHER	M 6 DIN 127	1
23-1	200624	STUD	TIMING CASE - M-25XPB	1
23-2	200838	STUD	TIMING CASE - M-35B / M-40B	1
24-1	301507	STUD	TIMING CASE - M-25XPB	2
24-2	200839	STUD	TIMING CASE- M-35B / M-40B	2
25	200861	GASKET	FUEL PUMP	1
26	302744	COVER	FUEL PUMP	1
27	031783	LOCKWASHER	M 6 DIN 127	2
28	015812	NUT	M 6 DIN 934	2
29	040078	FILTER KIT	REMOTE LUBE OIL - INCLUDES REF #'S 30 - 39	1
30	302842	O-RING		1
31	040075	ADAPTER	REMOTE OIL FILTER	1
32	013348	CONNECTOR	HOSE	2
33	011925	HOSE	OIL 40-1/4 LG	2
34	040074	BRACKET	REMOTE OIL FILTER	1
35	031503	CAPSCREW	1/4 NC x 3/4	2
36	031752	LOCKWASHER	SPLIT 1/4 MED (STEEL)	2
37	040073	ADAPTER	REMOTE OIL FILTER	1
38	034663	NIPPLE	OIL FILTER TO ADAPTER	1
39	036918	FILTER	LUBE OIL	1

Engine parts from Torrsen Marine - www.torresen.com - 231-759-8596

Engine parts from Torrsen Marine - www.torresen.com - 231-759-8596

PISTONS, CRANKSHAFT AND MAIN BEARINGS - M-25XPB

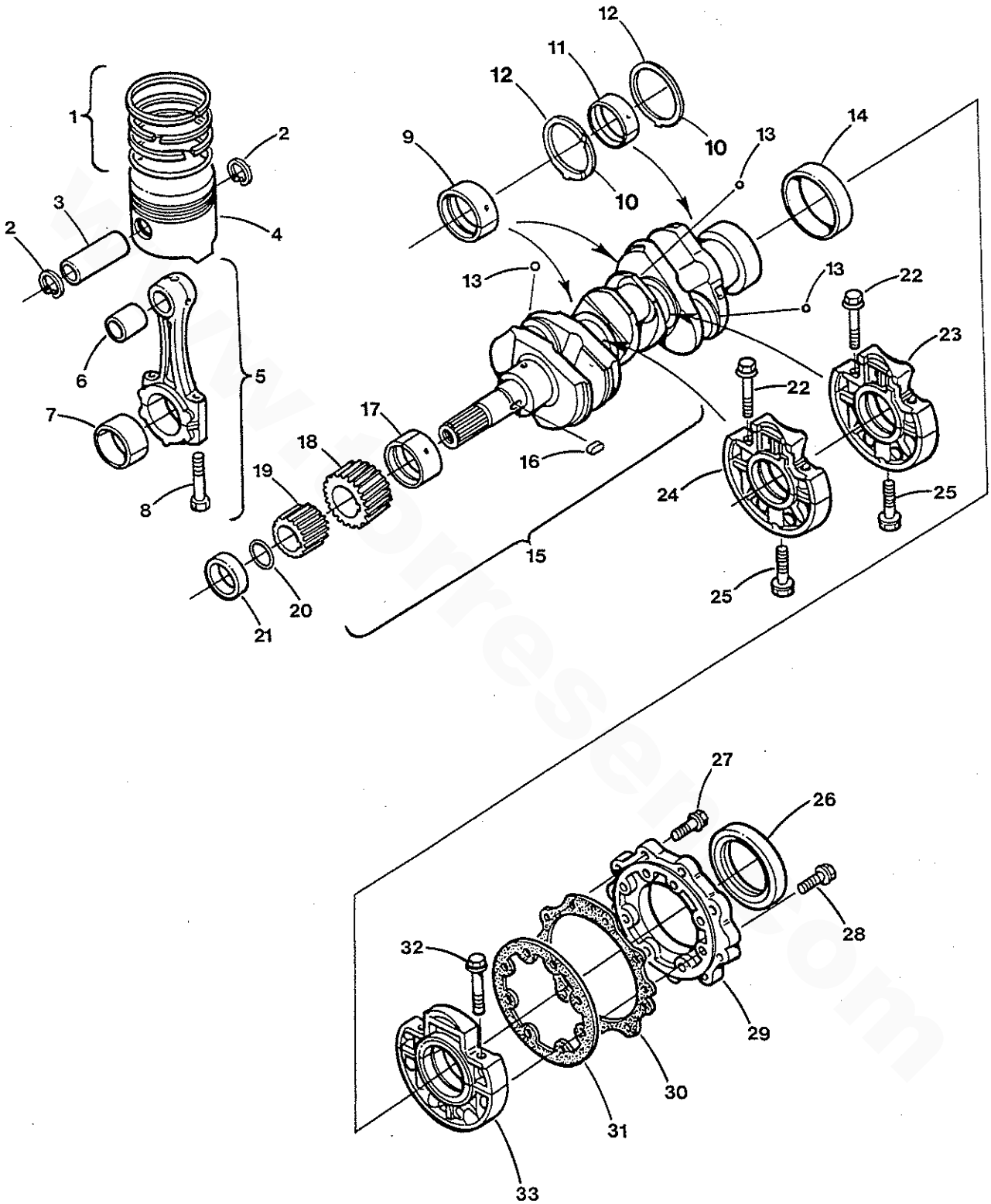

Engine parts from Torrsen Marine - www.torresen.com - 231-759-8596

Engine parts from Torrsen Marine - www.torresen.com - 231-759-8596

PISTONS, CRANKSHAFT AND MAIN BEARINGS - M-25XPB

Reference #	Part #	Part Name	Remarks	Quantity
1-1	200875	RING SET	STD	3
1-2	200876	RING SET	0.5 MM	3
2	200772	RING	RETAINING	6
3	200771	PIN	PISTON	3
4-1	200710	PISTON	STD	3
4-2	200711	PISTON	0.5 MM	3
5	200774	ROD	CONNECTING ASSEMBLY	3
6	200773	BUSHING	CONNECTING ROD	3
7-1	200776	BEARING SET	CONNECTING ROD, STD	3
7-2	200777	BEARING SET	CONNECTING ROD, 0.2MM	3
7-3	200778	BEARING SET	CONNECTING ROD, 0.4MM	3
8	200775	BOLT	CONNECTING ROD	6
9-1	200783	BEARING SET	MAIN STD	2
9-2	200789	BEARING SET	MAIN 0.2MM	2
9-3	200790	BEARING SET	MAIN 0.4MM	2
10-1	301780	THRUSTWASHER	STD	2
10-2	302613	THRUSTWASHER	0.2MM	2
10-3	302542	THRUSTWASHER	0.4MM	2
11-1	200784	BEARING SET	MAIN STD	1
11-2	200785	BEARING SET	MAIN 0.2MM	1
11-3	200786	BEARING SET	MAIN 0.4MM	1
12-1	302612	THRUSTWASHER	STD	2
12-2	200676	THRUSTWASHER	0.2MM	2
12-3	200677	THRUSTWASHER	0.4MM	2
13	302470	BALL	1/4	3
14	200781	BUSHING	CRANKSHAFT	1
15-1	200732	CRANKSHAFT	ASSEMBLY - INCLUDES REF #'S 13, 14, 16 - 19	1
16	200895	KEY	WOODRUFF	1
17-1	200782	BEARING SET	MAIN STD	1
17-2	200787	BEARING SET	MAIN 0.2MM	1
17-3	200788	BEARING SET	MAIN 0.4MM	1
18	200791	GEAR	CRANKSHAFT	1
19	200800	GEAR	OIL PUMP	1
20	200628	O-RING		1
21	200780	COLLAR	CRANKSHAFT	1
22	200739	BOLT	BEARING CASE	4
23	200870	CASE	ASSEMBLY, MAIN BEARING	1
24	200869	CASE	ASSEMBLY, MAIN BEARING	1
25	200740	BOLT	BEARING CASE	2
26	200738	SEAL	OIL	1
27-1	018804	CAPSCREW	M 6 X 20 DIN 933	9
27-2	031783	LOCKWASHER	M 6 DIN 127	9
28-1	020628	CAPSCREW	M 6 X 25 DIN 933	8
28-2	031783	LOCKWASHER	M 6 DIN 127	8
29	200742	COVER	BEARING CASE	1
30	200860	GASKET	BEARING COVER	1
31	200859	GASKET	BEARING CASE	1
32	200739	BOLT	BEARING CASE	2
33	200736	CASE	ASSEMBLY, MAIN BEARING	1

Engine parts from Torrsen Marine - www.torresen.com - 231-759-8596

Engine parts from Torrsen Marine - www.torresen.com - 231-759-8596

PISTONS, CRANKSHAFT AND MAIN BEARINGS - M-35B / M-40B

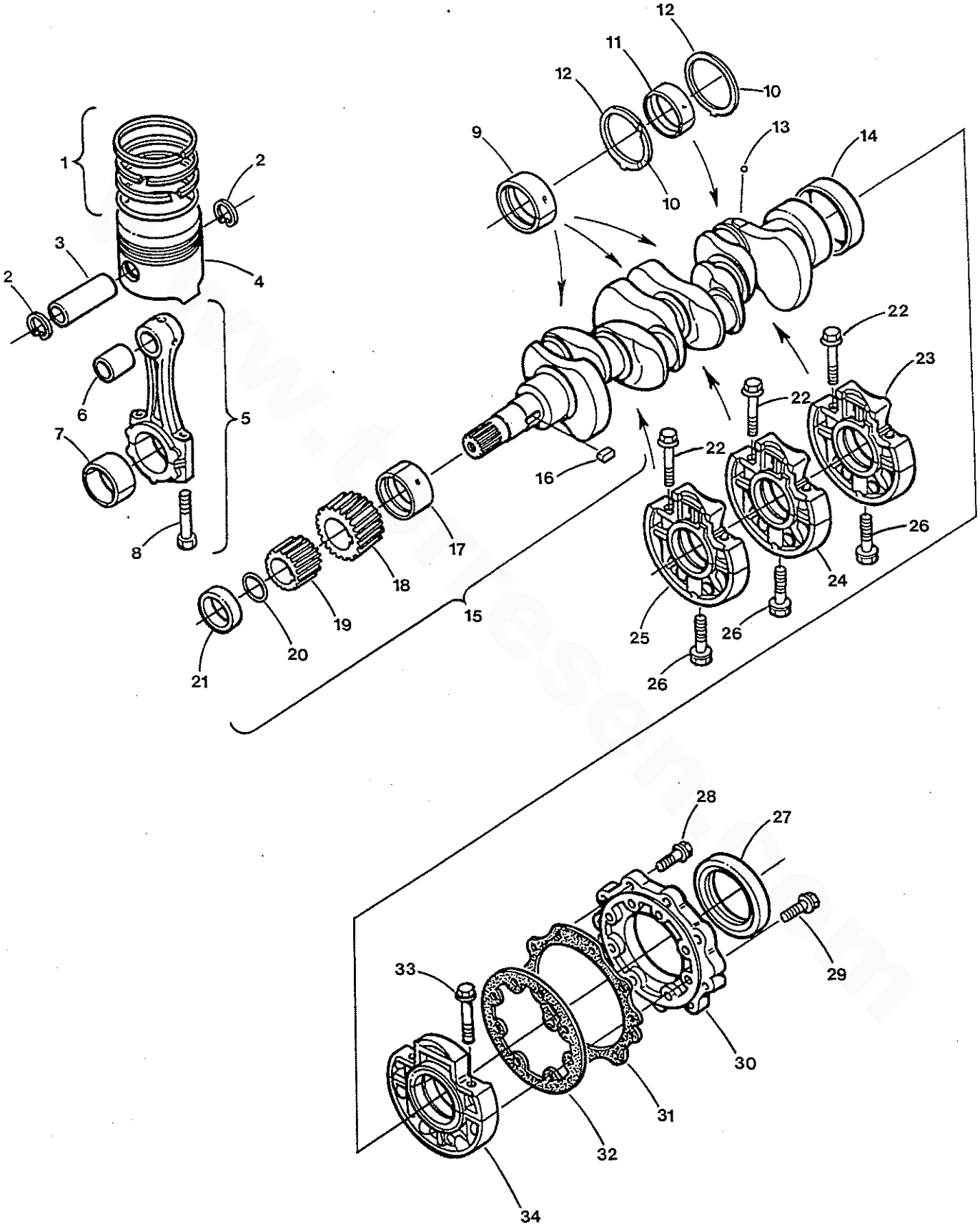

Engine parts from Torrsen Marine - www.torresen.com - 231-759-8596

Engine parts from Torrsen Marine - www.torresen.com - 231-759-8596

PISTONS, CRANKSHAFT AND MAIN BEARINGS - M-35B / M-40B

Reference #	Part #	Part Name	Remarks	Quantity
1-1	200875	RING SET	STD - M-35B	4
1-2	200851	RING SET	STD - M-40B	4
1-3	200876	RING SET	0.5 MM - M-35B	4
1-4	200852	RING SET	0.5 MM - M-40B	4
2	200772	RING	RETAINING	8
3	200771	PIN	PISTON	4
4-1	200710	PISTON	STD - M-35B	4
4-2	200713	PISTON	STD - M-40B	4
4-3	200711	PISTON	0.5 MM - M-35B	4
4-4	200714	PISTON	0.5 MM - M-40B	4
5	200774	ROD	CONNECTING ASSEMBLY	4
6	200773	BUSHING	CONNECTING ROD	4
7-1	200776	BEARING SET	CONNECTING ROD, STD	4
7-2	200777	BEARING SET	CONNECTING ROD, 0.2MM	4
7-3	200778	BEARING SET	CONNECTING ROD, 0.4MM	4
8	200775	BOLT	CONNECTING ROD	8
9-1	200783	BEARING SET	MAIN STD	3
9-2	200789	BEARING SET	MAIN 0.2MM	3
9-3	200790	BEARING SET	MAIN 0.4MM	3
10-1	301780	THRUSTWASHER	STD	2
10-2	302613	THRUSTWASHER	0.2MM	2
10-3	302542	THRUSTWASHER	0.4MM	2
11-1	200911	BEARING SET	MAIN STD	1
11-2	200785	BEARING SET	MAIN 0.2MM	1
11-3	200786	BEARING SET	MAIN 0.4MM	1
12-1	302612	THRUSTWASHER	STD	2
12-2	200676	THRUSTWASHER	0.2MM	2
12-3	200677	THRUSTWASHER	0.4MM	2
13	302470	BALL	1/4	4
14	200781	BUSHING	CRANKSHAFT	1
15-1	200779	CRANKSHAFT	ASSEMBLY- M-35B INCL. REF #'S 13,14,16-19	1
15-2	200899	CRANKSHAFT	ASSEMBLY- M-40B INCL. REF #'S 13,14,16-19	1
16	200895	KEY	WOODRUFF	1
17-1	200782	BEARING SET	MAIN STD	1
17-2	200787	BEARING SET	MAIN 0.2MM	1
17-3	200788	BEARING SET	MAIN 0.4MM	1
18	200791	GEAR	CRANKSHAFT	1
19	200800	GEAR	OIL PUMP	1
20	200634	O-RING		1
21	200780	COLLAR	CRANKSHAFT	1
22	200739	BOLT	BEARING CASE	6
23-1	200871	CASE	ASSEMBLY, MAIN BEARING - M-35B	1
23-2	200898	CASE	ASSEMBLY, MAIN BEARING - M-40B	1
24-1	200870	CASE	ASSEMBLY, MAIN BEARING - M-35B	1
24-2	200842	CASE	ASSEMBLY, MAIN BEARING - M-40B	1
25-1	200869	CASE	ASSEMBLY, MAIN BEARING - M-35B	1
25-2	200841	CASE	ASSEMBLY, MAIN BEARING - M-40B	1
26	200740	BOLT	BEARING CASE	3
27	200738	SEAL	OIL	1
28-1	018804	CAPSCREW	M 6 X 20 DIN 933	9
28-2	031783	LOCKWASHER	M 6 DIN 127	9
29-1	020628	CAPSCREW	M 6 X 25 DIN 933	8
29-2	031783	LOCKWASHER	M 6 DIN 127	8

Engine parts from Torrsen Marine - www.torresen.com - 231-759-8596

Engine parts from Torrsen Marine - www.torresen.com - 231-759-8596

PISTONS, CRANKSHAFT AND MAIN BEARINGS - M-35B / M-40B

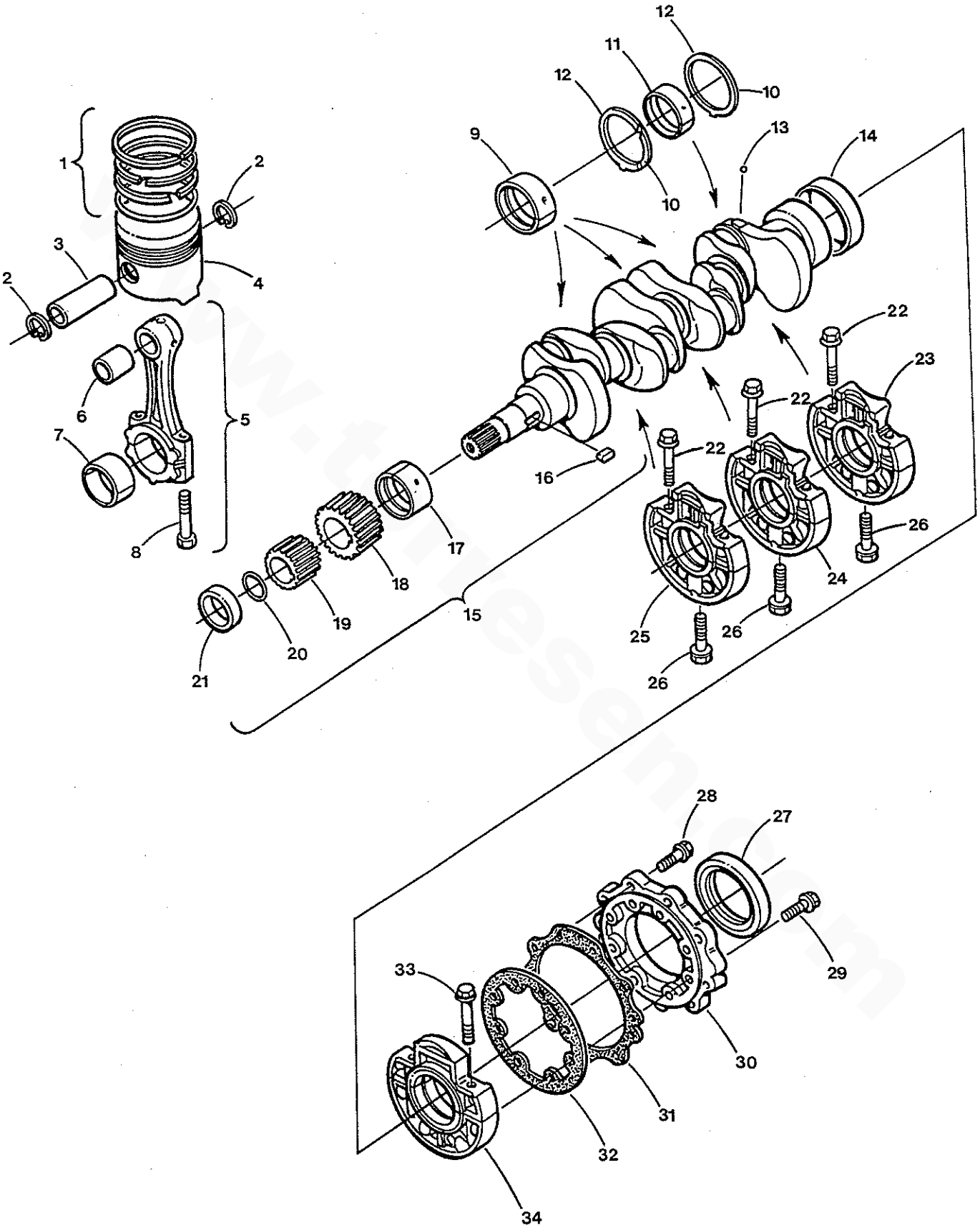

Engine parts from Torrsen Marine - www.torresen.com - 231-759-8596

Engine parts from Torrsen Marine - www.torresen.com - 231-759-8596

PISTONS, CRANKSHAFT AND MAIN BEARINGS - M-35B / M-40B

Reference #	Part #	Part Name	Remarks	Quantity
30	200742	COVER	BEARING CASE	1
31	200860	GASKET	BEARING COVER	1
32	200859	GASKET	BEARING CASE	1
33	200739	BOLT	BEARING CASE	2
34	200736	CASE	ASSEMBLY, MAIN BEARING	1

www.torresen.com

Engine parts from Torrsen Marine - www.torresen.com - 231-759-8596

Engine parts from Torrsen Marine - www.torresen.com - 231-759-8596

VALVE HEAD COVER AND AIR INTAKE MANIFOLD - M-25XPB

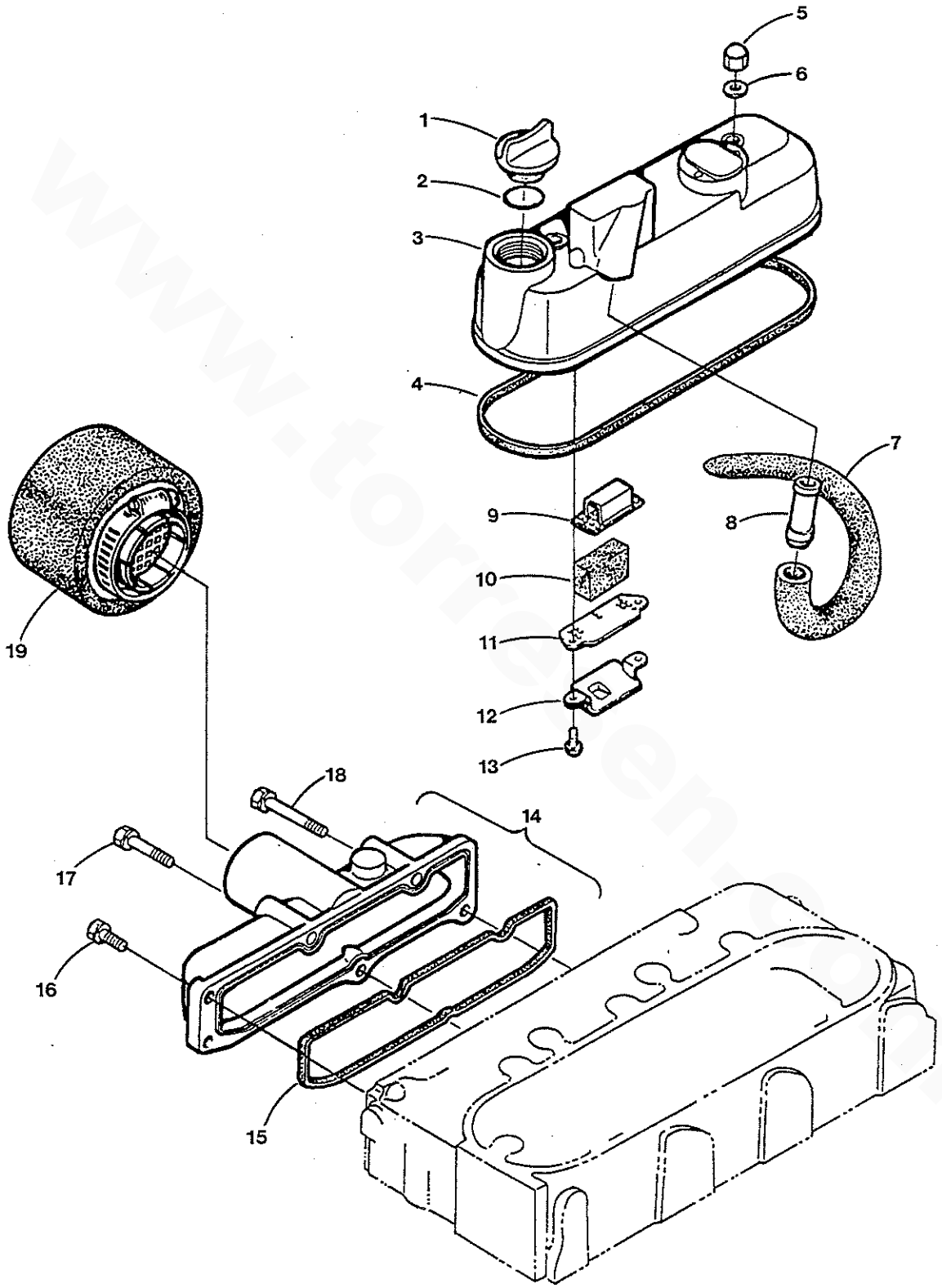

Engine parts from Torrsen Marine - www.torresen.com - 231-759-8596

Engine parts from Torrsen Marine - www.torresen.com - 231-759-8596

VALVE HEAD COVER AND AIR INTAKE MANIFOLD - M-25XPB

Reference #	Part #	Part Name	Remarks	Quantity
1	302707	CAP	OIL FILTER	1
2	298740	O-RING		1
3	200847	COVER	CYLINDER HEAD, ASSEMBLY	1
4	200848	GASKET	HEAD COVER	1
5	239457	NUT	CAP	3
6	299459	GASKET	ROCKER COVER STUD	3
7	200429	HOSE	BREATHER	1
8	200747	CONNECTOR	BREATHER HOSE	1
9	200744	PLATE	BREATHER ELEMENT	1
10	200748	ELEMENT	BREATHER	1
11	200743	PLATE	BREATHER ELEMENT	1
12	200745	SHIELD	OIL BREATHER	1
13	301399	SCREW	M 5 X 10 W/LW	2
14	200843	MANIFOLD	INTAKE ASSEMBLY	1
15	200844	GASKET	INTAKE MANIFOLD	1
16	043065	CAPSCREW	M 6 X 18 JIS 7 W/LW	3
17	043066	CAPSCREW	M 6 X 30 JIS 7 W/LW	1
18-1	300330	CAPSCREW	M 6 X 50 DIN 931	2
18-2	031783	LOCKWASHER	M 6 DIN 127	2
19	302181	SILENCER	INTAKE	1

www.torresen.com

Engine parts from Torrsen Marine - www.torresen.com - 231-759-8596

Engine parts from Torrsen Marine - www.torresen.com - 231-759-8596

VALVE HEAD COVER AND AIR INTAKE MANIFOLD - M-35B / M-40B

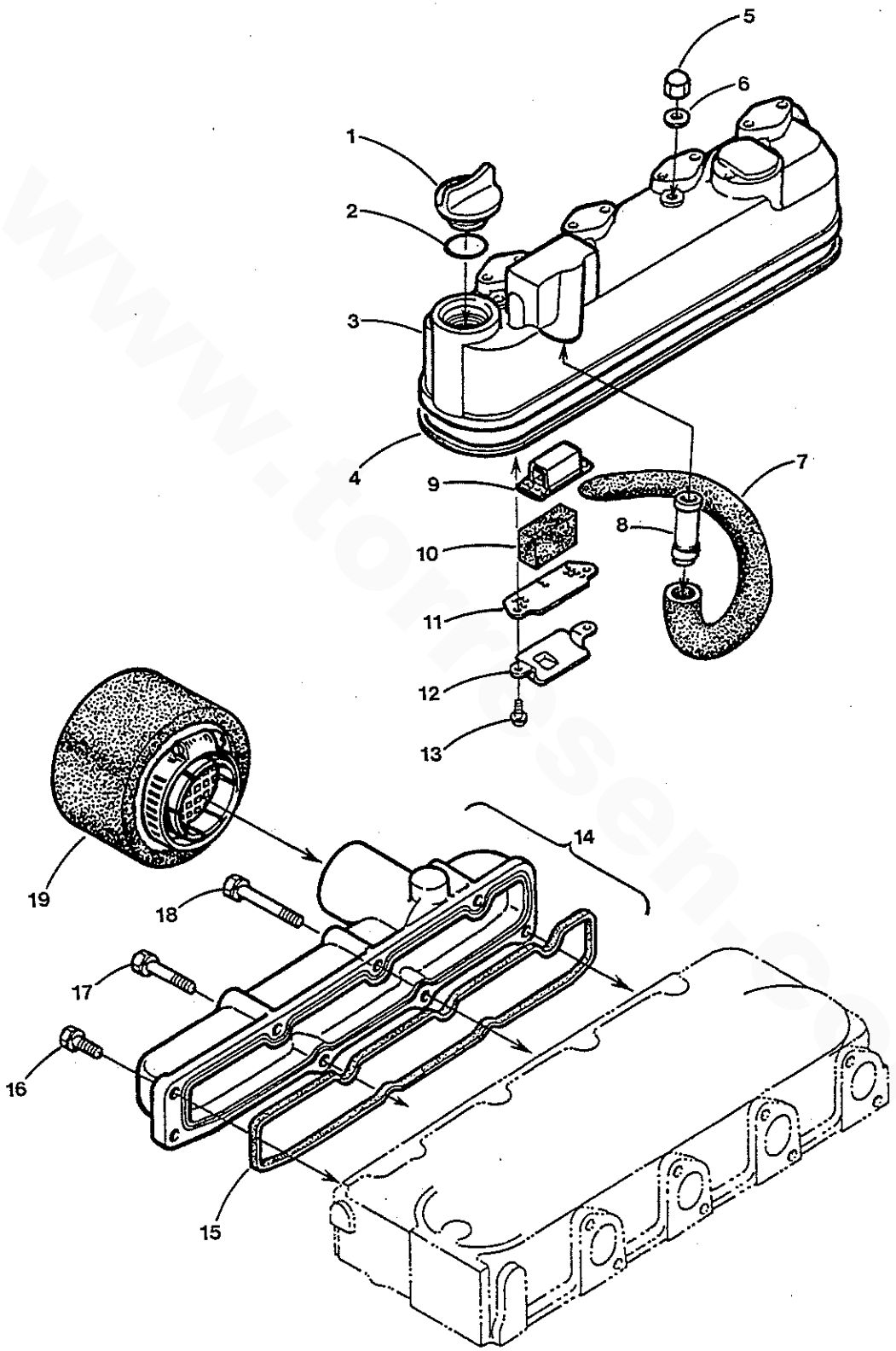

Engine parts from Torrsen Marine - www.torresen.com - 231-759-8596

Engine parts from Torrsen Marine - www.torresen.com - 231-759-8596

VALVE HEAD COVER AND AIR INTAKE MANIFOLD - M-35B / M-40B

Reference #	Part #	Part Name	Remarks	Quantity
1	302707	CAP	OIL FILTER	1
2	200635	O-RING		1
3	200765	COVER	CYLINDER HEAD, ASSEMBLY	1
4	200766	GASKET	HEAD COVER	1
5	239457	NUT	CAP	4
6	299459	GASKET	ROCKER COVER STUD	4
7	200429	HOSE	BREATHER	1
8	200747	CONNECTOR	BREATHER HOSE	1
9	200744	PLATE	BREATHER ELEMENT	1
10	200748	ELEMENT	BREATHER	1
11	200743	PLATE	BREATHER ELEMENT	1
12	200745	SHIELD	OIL BREATHER	1
13	301399	SCREW	M 5 X 10 W/LW	2
14	200872	MANIFOLD	INTAKE ASSEMBLY	1
15	200749	GASKET	INTAKE MANIFOLD	1
16	043065	CAPSCREW	M 6 X 18 JIS 7 W/LW	3
17	043066	CAPSCREW	M 6 X 30 JIS 7 W/LW	2
18-1	300330	CAPSCREW	M 6 X 50 DIN 931	2
18-2	031783	LOCKWASHER	M 6 DIN 127	2
19	302181	SILENCER	INTAKE	1

Engine parts from Torrsen Marine - www.torresen.com - 231-759-8596

Engine parts from Torrsen Marine - www.torresen.com - 231-759-8596

EXHAUST MANIFOLD AND HEAT EXCHANGER - M-25XPB/ M-35B/ M-40B

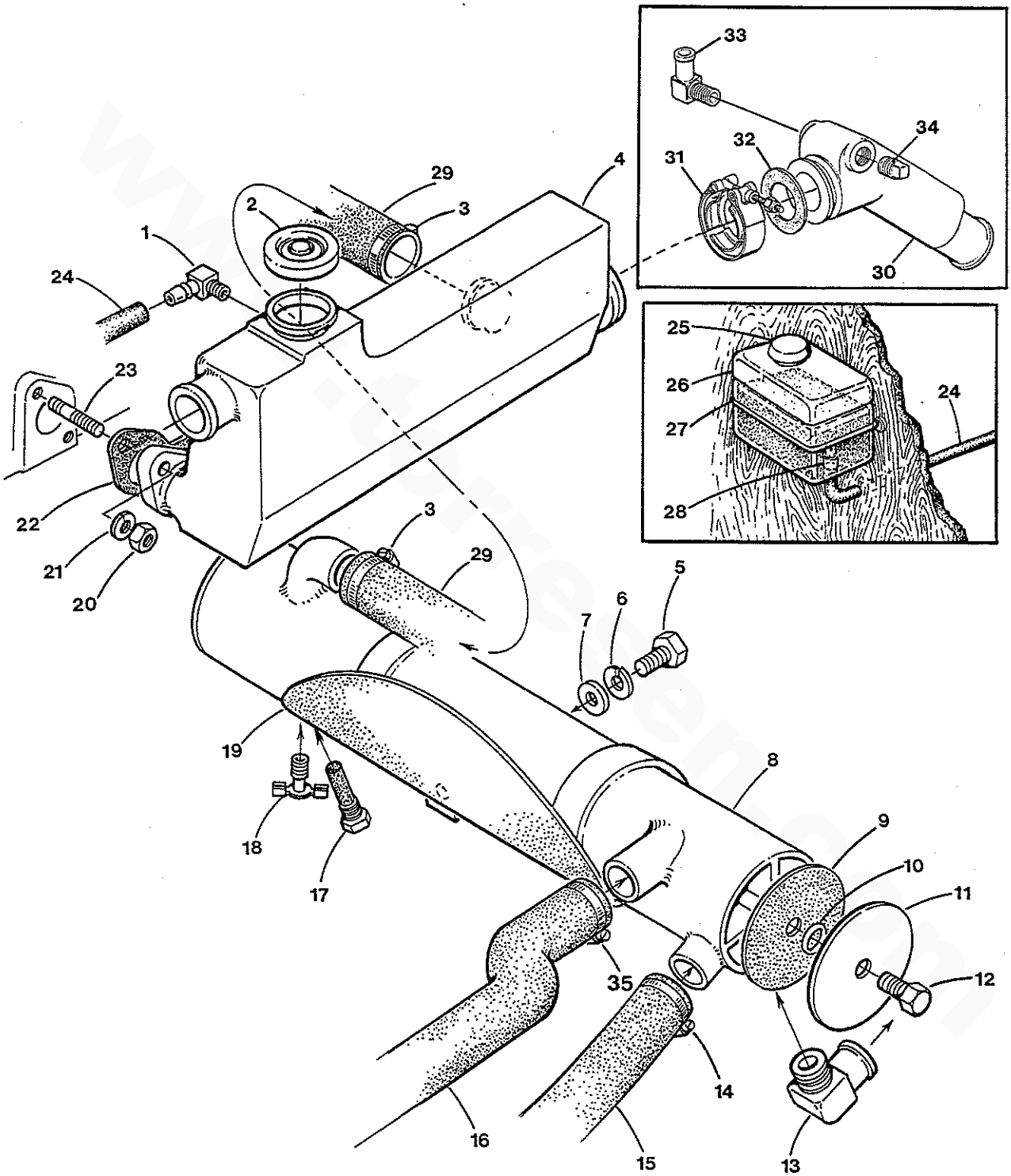

Engine parts from Torrsen Marine - www.torresen.com - 231-759-8596

Engine parts from Torrsen Marine - www.torresen.com - 231-759-8596

EXHAUST MANIFOLD AND HEAT EXCHANGER - M-25XPB/ M-35B/ M-40B

Reference #	Part #	Part Name	Remarks	Quantity
1	024907	ELBOW	1/8NPT X 5/16 HOSE	1
2	024306	CAP	PRESSURE 15 PSI	1
3	011405	CLAMP	HOSE 16	2
4-1	201025	MANIFOLD	EXHAUST - M-25XPB	1
4-2	201026	MANIFOLD	EXHAUST - M-35B/M-40B	1
5	018813	CAPSCREW	M 10 X 20 DIN 933	2
6	019262	LOCKWASHER	M 10 DIN 127	2
7	031789	WASHER	M 10 DIN 125	2
8	201027	EXCHANGER	HEAT	1
9	022851	GASKET	EXCHANGER END COVER 2-3/4"	1
10	019321	O-RING	EXCHANGER END COVER 2-3/4"	1
11	022850	COVER	EXCHANGER END	1
12	022852	CAPSCREW	3/8 NC X 3/4 (BRASS)	1
13	036614	ELBOW	HOSE 3/8NPT TO 1	1
14	011386	CLAMP	HOSE 12	1
15	019059	HOSE	7/8 INCH WIRE INSERTED - INCHES REQ'D	26
16-1	200421	HOSE	EXCHANGER TO PUMP - M-25XPB	1
16-2	200439	HOSE	EXCHANGER TO PUMP - M-35B / M-40B	1
17	011885	ZINC		1
18	011471	PETCOCK	1/8NPT EXT SEAT (BRASS)	1
19	303147	PAD	EXCHANGER MOUNT	1
20-1	200446	NUT	M 7 DIN 934 - M-25XPB	6
20-2	200446	NUT	M 7 DIN 934 - M-35B / M-40B	8
21-1	042296	LOCKWASHER	M 7 DIN 127 - M-25XPB	6
21-2	042296	LOCKWASHER	M 7 DIN 127 - M-35B / M-40B	8
22-1	200845	GASKET	EXHAUST MANIFOLD - M-25XPB	1
22-2	200912	GASKET	EXHAUST MANIFOLD - M-35B / M-40B	1
23-1	200432	STUD	M 7 - M-25XPB	6
23-2	200432	STUD	M 7 - M-35B / M-40B	8
24	024637	TUBING	MANIFOLD TO TANK - INCHES REQ'D	72
25	024858	CAP	COOLANT	1
26	024786	STRAP	COOLANT	1
27-1	024977	TANK KIT	INCL REF # 24 THRU 28	1
27-2	024704	TANK	COOLANT RECOVERY	1
28	024906	CLAMP	HOSE 04 MINI	2
29	015774	HOSE	1-1/8 WIRE INSERTED - INCHES REQ'D	11
30-1	200488	KIT	ELBOW, WATER INJ EXHAUST 90 DEG - OPTION	1
30-2	200486	KIT	ELBOW, WATER INJ EXHAUST 45 DEG - OPTION	1
31	036541	CLAMP	EXHAUST ELBOW	1
32	036425	GASKET	EXHAUST ELBOW	1
33-1	036614	ELBOW	HOSE 3/8NPT TO 1 - 90 DEGREE	1
33-2	036616	ELBOW	1/2NPT TO 1" HOSE - 45 DEGREE	1
34-1	036849	PLUG	3/4 NPT SQ HD 90 DEG ELBOW (BRASS)	1
34-2	035747	PLUG	1/2 NPT SQ HD (BRASS)	1
35	021878	CLAMP	HOSE 20	2
36	042289	NAMEPLATE		1
37	031935	SCREW	8-32 X 1/4 SS OVAL HEAD	2

Engine parts from Torrsen Marine - www.torresen.com - 231-759-8596

FUEL FILTER, NOZZLE HOLDERS AND INJECTORS - M-25XPB

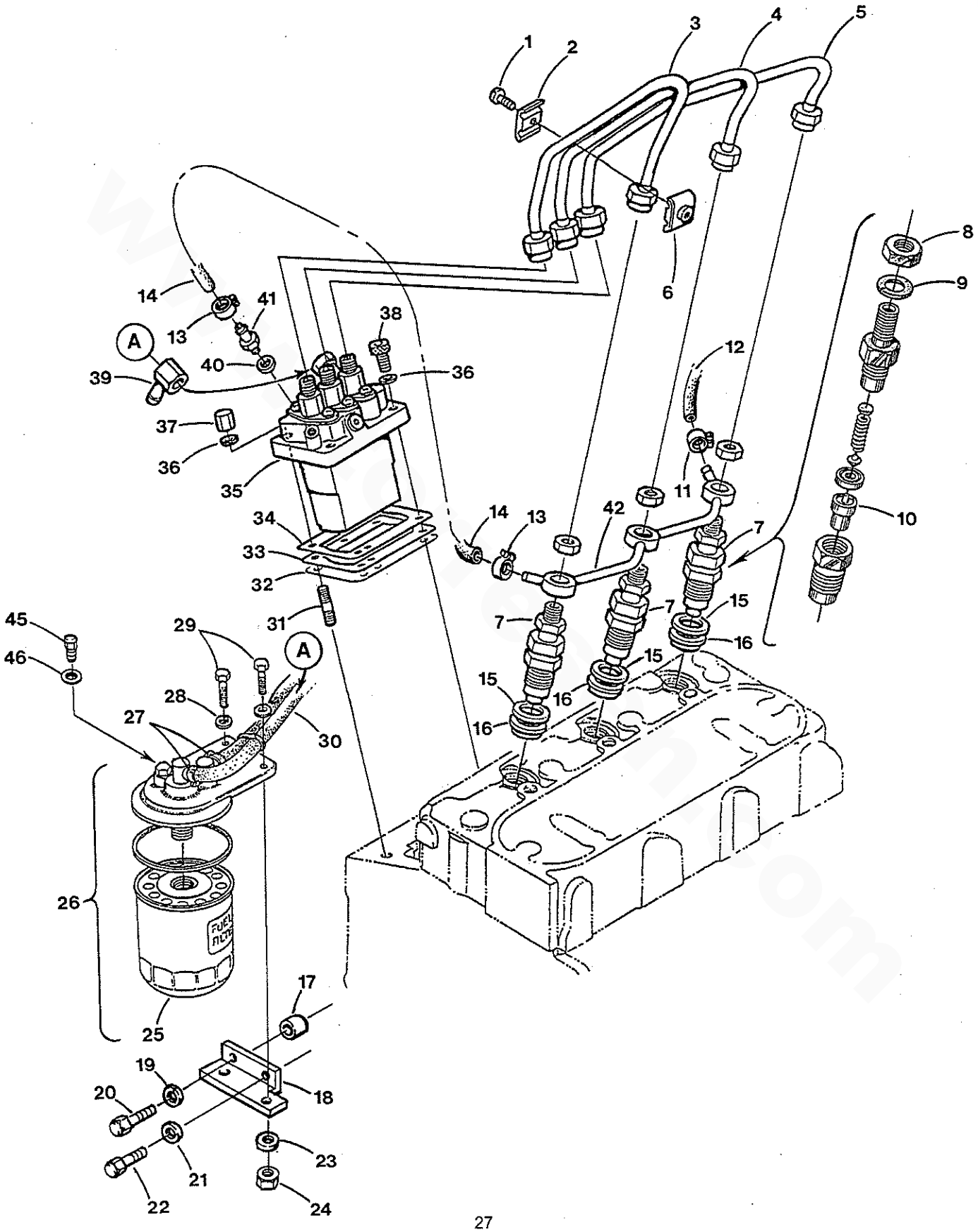

Engine parts from Torrsen Marine - www.torresen.com - 231-759-8596

FUEL FILTER, NOZZLE HOLDERS AND INJECTORS - M-25XPB

Reference #	Part #	Part Name	Remarks	Quantity
1	298794	SCREW	M 5 X 20 PHILLIPS HD W/LW	2
2	301307	CLAMP	FUEL LINE	2
3	200880	LINE	INJECTOR 1	1
4	200881	LINE	INJECTOR 2	1
5	200882	LINE	INJECTOR 3	1
6	301306	CLAMP	FUEL LINE	2
7	200701	INJECTOR		3
8	200703	NUT	INJECTOR LEAK-OFF	3
9	200704	WASHER	INJECTOR	3
10	200702	NOZZLE	INJECTOR	3
11	040384	CLAMP	HOSE, MINI	1
12	036869	HOSE	FUEL, 3/16 ID - INCHES REQ'D	7
13	040622	CLAMP	HOSE, MINI	2
14	301299	LINE	RETURN	1
15	301303	GASKET	INJECTOR	3
16	200617	SHIELD	HEAT INJECTOR	3
17	042225	SPACER		1
18	300103	BRACKET	FUEL FILTER	1
19	031786	LOCKWASHER	M 8 DIN 127	1
20	017196	CAPSCREW	M 8 X 20 DIN 933	1
21	019262	LOCKWASHER	M 10 DIN 127	1
22	024952	CAPSCREW	M 10 X 1.25 X 25 DIN 961	1
23	031758	LOCKWASHER	SPLIT, 5/16 MED (STEEL)	2
24	031756	NUT	HEX 5/16-18 NC (STEEL ZINC)	2
25	298854	FILTER	FUEL	1
26	298853	FILTER	FUEL ASSEMBLY	1
27	017298	CLAMP	HOSE	2
28	031759	WASHER	FLAT, 5/16 SAE (STEEL)	2
29	031555	CAPSCREW	5/16NC X 1	2
30	039140	HOSE	FUEL,5/16 ID - INCHES REQ'D	10
31	301312	STUD	INJECTION PUMP	2
32	200575	SHIM	INJECTION PUMP .30MM	1
33	200574	SHIM	INJECTION PUMP .25MM	1
34	200573	SHIM	INJECTION PUMP .20MM	1
35	200698	PUMP	INJECTION ASSEMBLY	1
36	031783	LOCKWASHER	M 6 DIN 127	4
37	301313	NUT	CAP	2
38	039874	CAPSCREW	M 6 X 20 DIN 912	2
39	200834	BANJO	INJECTION PUMP	1
40	301241	GASKET		1
41	301300	SCREW	BLEED	1
42	200853	LINE	INJECTOR RETURN	1
45	299855	SCREW	BLEED	1
46	299856	O-RING		1

Engine parts from Torrsen Marine - www.torresen.com - 231-759-8596

Engine parts from Torrsen Marine - www.torresen.com - 231-759-8596

FUEL FILTER, NOZZLE HOLDERS AND INJECTORS - M-35B / M-40B

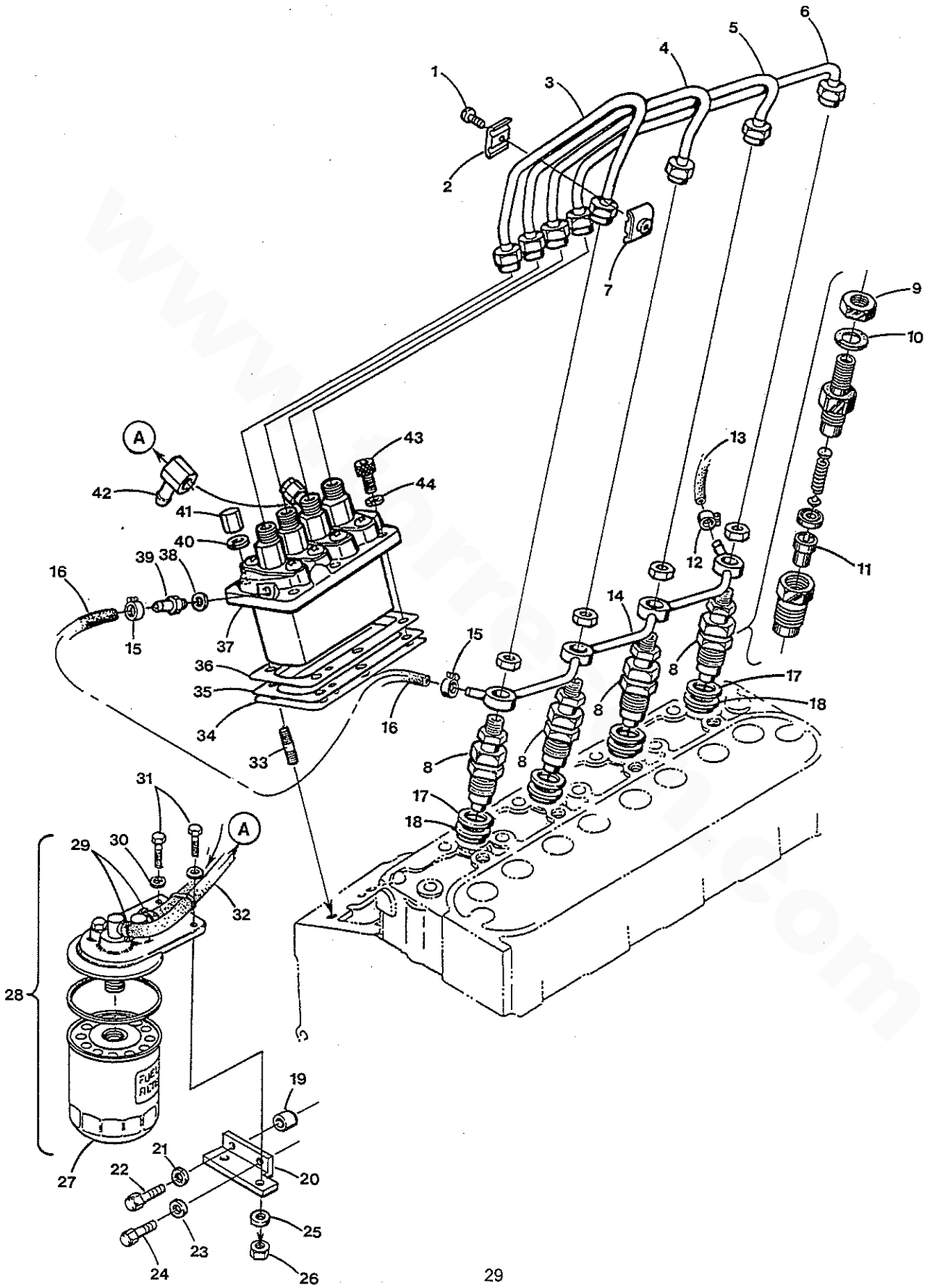

Engine parts from Torrsen Marine - www.torresen.com - 231-759-8596

Engine parts from Torrsen Marine - www.torresen.com - 231-759-8596

FUEL FILTER, NOZZLE HOLDERS AND INJECTORS - M-35B / M-40B

Reference #	Part #	Part Name	Remarks	Quantity
1	298794	SCREW	M 5 X 20 PHILLIPS HD W/LW	3
2	301307	CLAMP	FUEL LINE	3
3	200880	LINE	INJECTOR 1	1
4	200881	LINE	INJECTOR 2	1
5	200882	LINE	INJECTOR 3	1
6	200883	LINE	INJECTOR 4	1
7	301306	CLAMP	FUEL LINE	3
8	200701	INJECTOR		4
9	200703	NUT	INJECTOR LEAK-OFF	4
10	200704	WASHER	INJECTOR	4
11	200702	NOZZLE	INJECTOR	4
12	040384	CLAMP	HOSE, MINI	1
13	036869	HOSE	FUEL, 3/16 ID - INCHES REQ'D	7
14	200879	LINE	INJECTOR RETURN	1
15	040622	CLAMP	HOSE, MINI	2
16	301299	LINE	RETURN	1
17	301303	GASKET	INJECTOR	4
18	200617	SHIELD	HEAT INJECTOR	4
19	042225	SPACER		1
20	300103	BRACKET	FUEL FILTER	1
21	031786	LOCKWASHER	M 8 DIN 127	1
22	017196	CAPSCREW	M 8 X 20 DIN 933	1
23	019262	LOCKWASHER	M 10 DIN 127	1
24	024952	CAPSCREW	M 10 X 1.25 X 25 DIN 961	1
25	031758	LOCKWASHER	SPLIT, 5/16 MED (STEEL)	2
26	031756	NUT	HEX 5/16-18 NC (STEEL ZINC)	2
27	298854	FILTER	FUEL	1
28	298853	FILTER	FUEL ASSEMBLY	1
29	017298	CLAMP	HOSE	2
30	031759	WASHER	FLAT, 5/16 SAE (STEEL)	2
31	031555	CAPSCREW	5/16NC X 1	2
32	039140	HOSE	FUEL,5/16 ID - INCHES REQ'D	21
33	301312	STUD	INJECTION PUMP	3
34	200708	SHIM	INJECTION PUMP .30MM	1
35	200707	SHIM	INJECTION PUMP .25MM	1
36	200706	SHIM	INJECTION PUMP .20MM	1
37	200715	PUMP	INJECTION ASSEMBLY	1
38	301241	GASKET		1
39	301300	SCREW	BLEED	1
40	031783	LOCKWASHER	M 6 DIN 127	6
41	301313	NUT	CAP	3
42	200834	BANJO	INJECTION PUMP	1
43	039874	CAPSCREW	M 6 X 20 DIN 912	3
44	031783	LOCKWASHER	M 6 DIN 127	6
45	299855	SCREW	BLEED	1
46	299856	O-RING		1

Engine parts from Torrsen Marine - www.torresen.com - 231-759-8596

Engine parts from Torrsen Marine - www.torresen.com - 231-759-8596

FUEL CAMSHAFT AND GOVERNOR SHAFT - M-25XPB

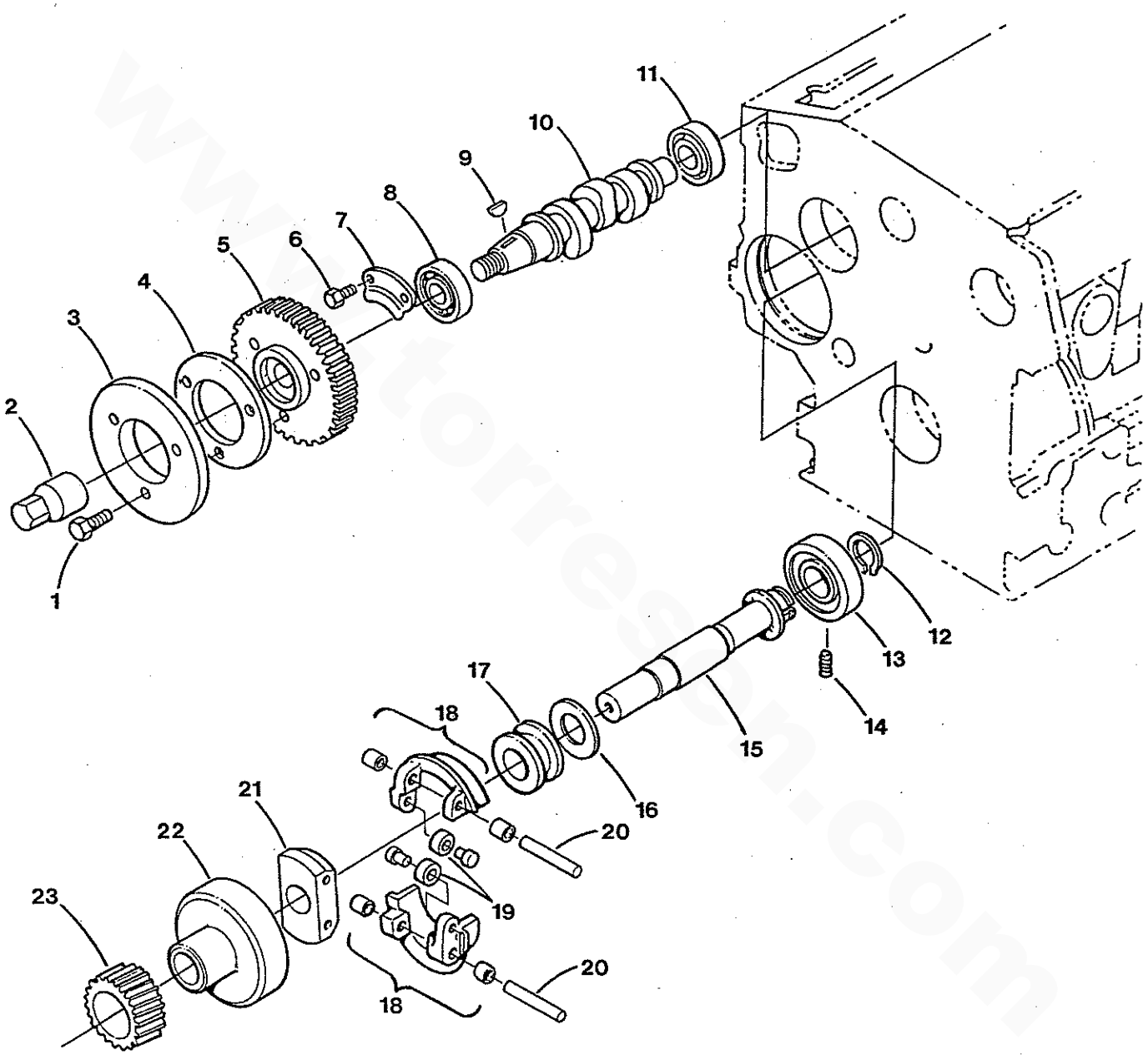

Engine parts from Torrsen Marine - www.torresen.com - 231-759-8596

Engine parts from Torrsen Marine - www.torresen.com - 231-759-8596

FUEL CAMSHAFT AND GOVERNOR SHAFT - M-25XPB

Reference #	Part #	Part Name	Remarks	Quantity
1	043065	CAPSCREW	M 6 X 18 JIS 7 W/LW	3
2	200831	NUT	CAP	1
3	200803	CAM	FUEL	1
4	200804	WASHER	INJECTION PUMP DRIVE GEAR	1
5	200897	GEAR	INJECTION PUMP	1
6	035785	CAPSCREW	M 6 X 12 JIS 6 W/LW	2
7	200769	STOPPER	FUEL CAMSHAFT	1
8	200646	BEARING	BALL	1
9	200833	KEY	WOODRUFF	1
10	200696	CAMSHAFT	FUEL	1
11	200645	BEARING	BALL	1
12	200886	RING	RETAINING (EXTERNAL)	1
13	200644	BEARING	BALL	1
14	200812	SETSCREW	ASSEMBLY	1
15	200866	SHAFT	GOVERNOR, ASSY - INCLUDES REF #'S 16-23	1
16	200811	THRUSTWASHER		1
17	200810	SLEEVE	GOVERNOR	1
18	200806	WEIGHT	GOVERNOR ASSEMBLY	2
19	201002	ROLLER	GOVERNOR	2
20	200807	SHAFT	GOVERNOR WEIGHT	2
21	200808	HOLDER	GOVERNOR WEIGHT	1
22	200809	HOLDER	GOVERNOR GEAR	1
23	200904	GEAR	GOVERNOR	1

www.torresen.com

Engine parts from Torrsen Marine - www.torresen.com - 231-759-8596

Engine parts from Torrsen Marine - www.torresen.com - 231-759-8596

FUEL CAMSHAFT AND GOVERNOR SHAFT - M-35B / M-40B

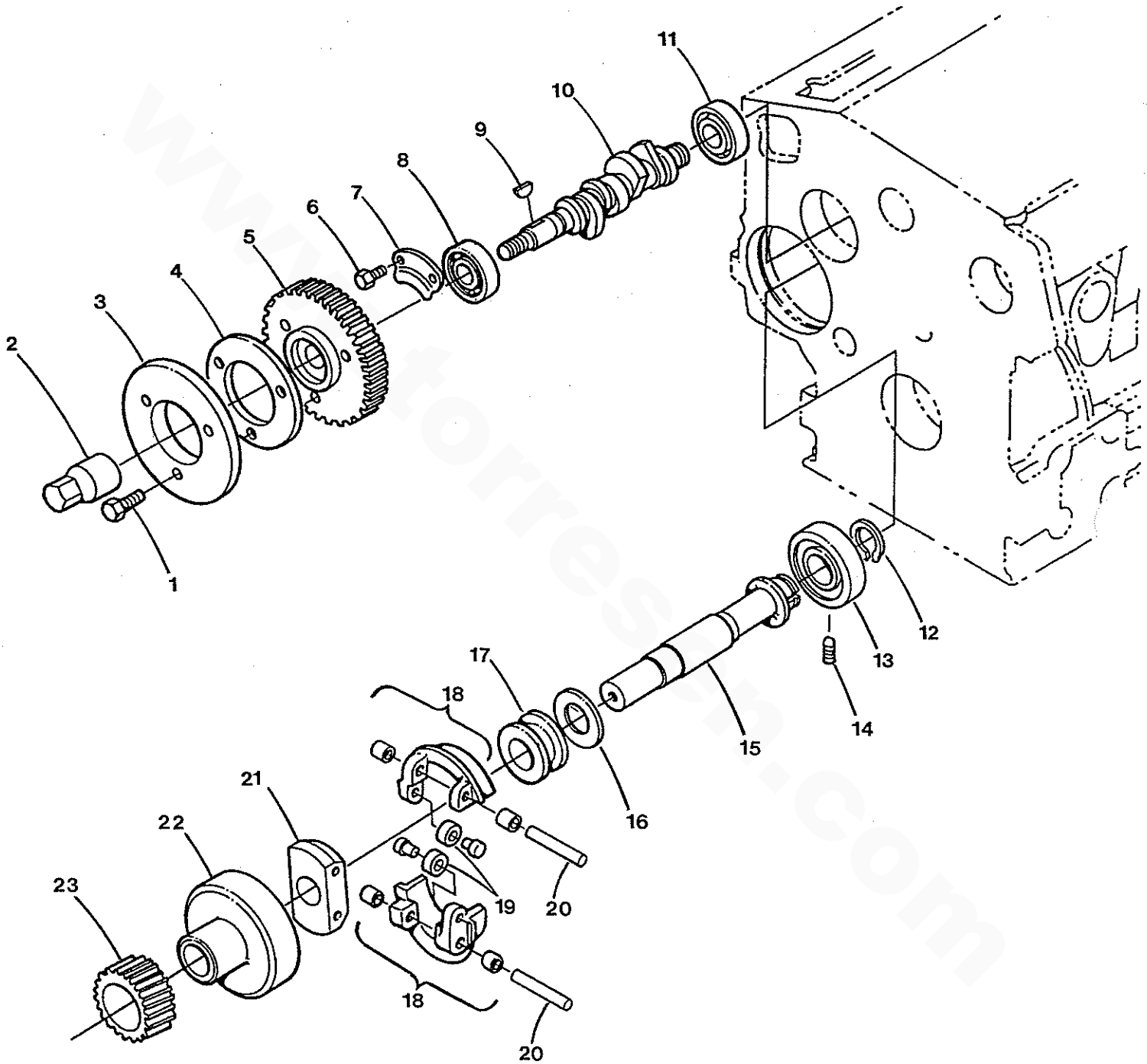

Engine parts from Torrsen Marine - www.torresen.com - 231-759-8596

Engine parts from Torrsen Marine - www.torresen.com - 231-759-8596

FUEL CAMSHAFT AND GOVERNOR SHAFT - M-35B / M-40B

Reference #	Part #	Part Name	Remarks	Quantity
1	043065	CAPSCREW	M 6 X 18 JIS 7 W/LW	3
2	200831	NUT	CAP	1
3	200803	CAM	FUEL	1
4	200804	WASHER	INJECTION PUMP DRIVE GEAR	1
5	200897	GEAR	INJECTION PUMP	1
6	035785	CAPSCREW	M 6 X 12 JIS 6 W/LW	2
7	200769	STOPPER	FUEL CAMSHAFT	1
8	200646	BEARING	BALL	1
9	200833	KEY	WOODRUFF	1
10	200705	CAMSHAFT	FUEL	1
11	200645	BEARING	BALL	1
12	200886	RING	RETAINING (EXTERNAL)	1
13	200644	BEARING	BALL	1
14	200812	SETSCREW		1
15-1	200903	SHAFT	GOVERNOR ASSY-INCL REF#'S 15-2 THRU 23	1
15-2	200884	SHAFT	GOVERNOR	1
16	200811	THRUSTWASHER		1
17	200810	SLEEVE	GOVERNOR	1
18	200806	WEIGHT	GOVERNOR ASSEMBLY	2
19	201002	ROLLER	GOVERNOR	2
20	200807	SHAFT	GOVERNOR WEIGHT	2
21	200808	HOLDER	GOVERNOR WEIGHT	1
22	200809	HOLDER	GOVERNOR GEAR	1
23	200904	GEAR	GOVERNOR	1

Engine parts from Torrsen Marine - www.torresen.com - 231-759-8596

Engine parts from Torrsen Marine - www.torresen.com - 231-759-8596

VALVES, ROCKER ARMS AND CAMSHAFTS - M-25XPB

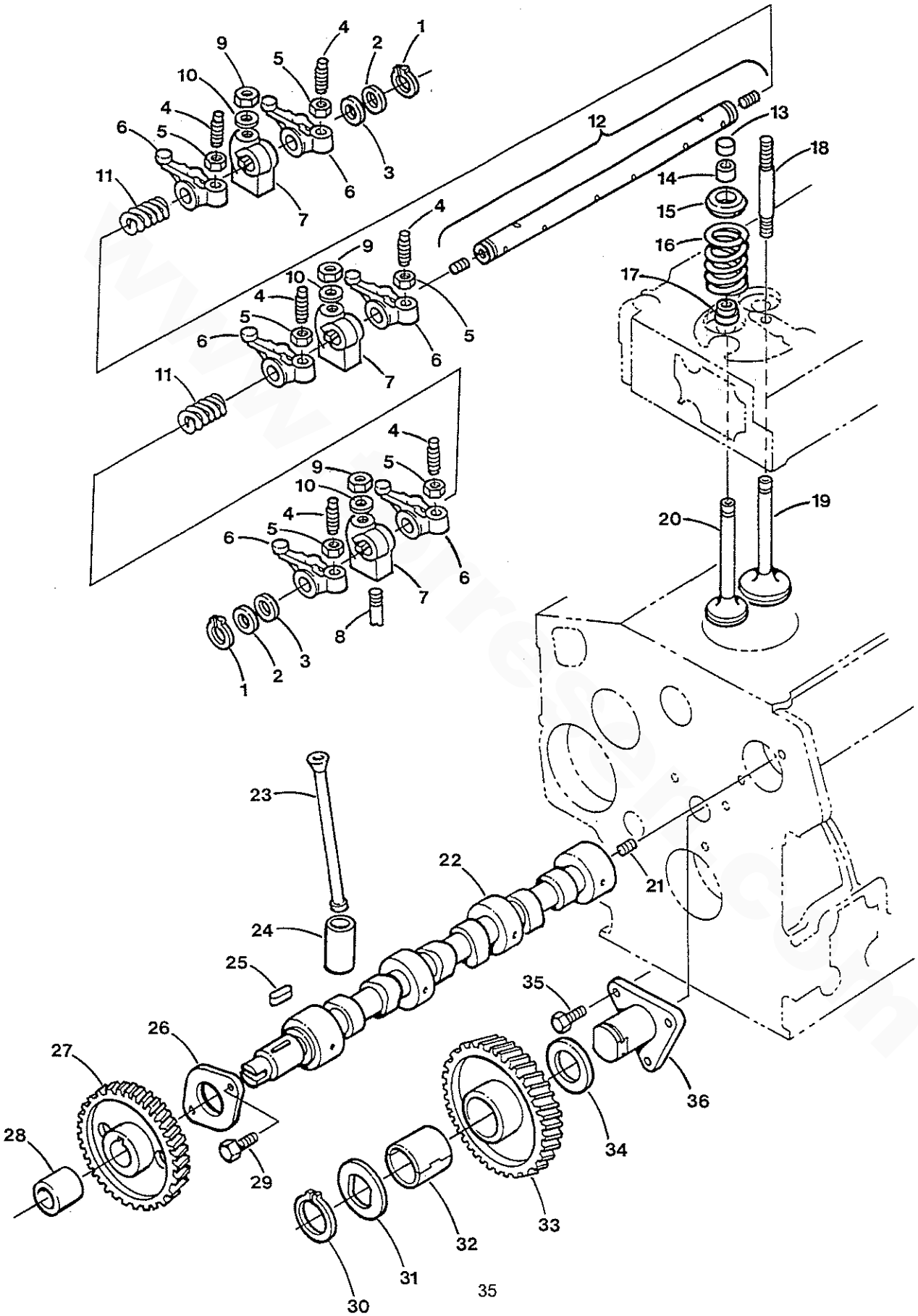

Engine parts from Torrsen Marine - www.torresen.com - 231-759-8596

Engine parts from Torrsen Marine - www.torresen.com - 231-759-8596

VALVES, ROCKER ARMS AND CAMSHAFTS - M-25XPB

Reference #	Part #	Part Name	Remarks	Quantity
1	200626	RING	RETAINING (EXTERNAL)	2
2	200764	WASHER	ROCKER ARM SHAFT	2
3	200763	WASHER	ROCKER ARM SHAFT	2
4	200757	SCREW	ADJUSTING	6
5	200758	NUT	ROCKER ARM	6
6	200755	ROCKER ARM	ASSEMBLY - INCLUDES REF #'S 4 & 5	6
7	200761	BRACKET	ROCKER ARM	3
8	299447	SETSCREW	ROCKER ARM	1
9	299446	NUT	ROCKER BRACKET	3
10	300156	WASHER	ROCKER BRACKET	3
11	200760	SPRING	ROCKER SHAFT	2
12	200846	SHAFT	ROCKER ARM ASSY-INCLUDES SETSCREW	0
13	299442	CAP	VALVE	6
14	299440	COLLET	VALVE SPRING	6
15	302453	SEAT	VALVE SPRING UPPER	6
16	200873	SPRING	VALVE	6
17	200647	SEAL	VALVE STEM	6
18	299445	STUD	ROCKER BRACKET	3
19	200750	VALVE	INLET	3
20	200751	VALVE	EXHAUST	3
21	301713	SETSCREW		1
22	200850	CAMSHAFT	ASSEMBLY - INCLUDES REF #'S 21,25-27 & 29	0
23	200767	PUSHROD		6
24	200849	TAPPET		6
25	301568	KEY	WOODRUFF	1
26	200768	STOPPER	CAMSHAFT	1
27	200770	GEAR	CAMSHAFT	1
28	044497	SLEEVE	RAW WATER PUMP	1
29	035799	CAPSCREW	M 6 X 14 JIS W/LW	2
30	200793	RING	RETAINING (EXTERNAL)	1
31	200795	THRUSTWASHER	IDLER GEAR	1
32	200878	BUSHING	IDLER GEAR	1
33	200877	GEAR	IDLER ASSEMBLY - INCLUDES REF # 32	0
34	200794	THRUSTWASHER	IDLER GEAR	1
35	035800	CAPSCREW	M 6 X 16 JIS 6 W/ LW	3
36	200792	SHAFT	IDLER GEAR	1

Engine parts from Torrsen Marine - www.torresen.com - 231-759-8596

Engine parts from Torrsen Marine - www.torresen.com - 231-759-8596

VALVES, ROCKER ARMS AND CAMSHAFTS - M-35B / M-40B

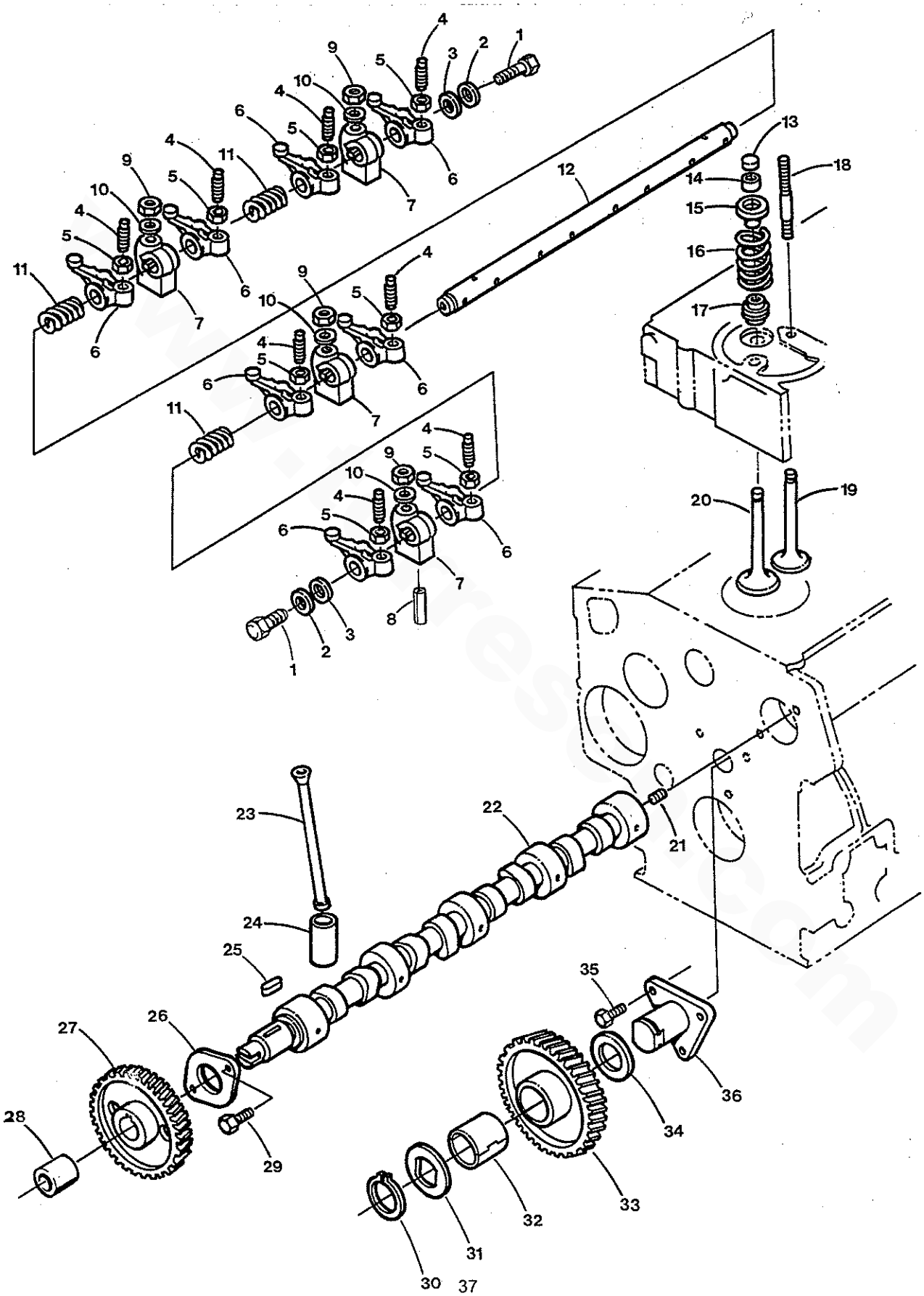

Engine parts from Torrsen Marine - www.torresen.com - 231-759-8596

Engine parts from Torrsen Marine - www.torresen.com - 231-759-8596

VALVES, ROCKER ARMS AND CAMSHAFTS - M-35B / M-40B

Reference #	Part #	Part Name	Remarks	Quantity
1	301256	CAPSCREW	M 6 X 10 JIS W/LW	2
2	301255	WASHER	PLAIN	2
3	200763	WASHER	ROCKER ARM SHAFT	2
4	200757	SCREW	ADJUSTING	8
5	200758	NUT	ROCKER ARM	8
6	200756	ROCKER ARM	ASSEMBLY - INCLUDES REF #'S 4 & 5	8
7	200761	BRACKET	ROCKER ARM	4
8	200637	PIN	SPRING	1
9	299446	NUT	ROCKER BRACKET	4
10	300156	WASHER	ROCKER BRACKET	4
11	200760	SPRING	ROCKER SHAFT	3
12	200759	SHAFT	ROCKER ARM	1
13	299442	CAP	VALVE	8
14	299440	COLLET	VALVE SPRING	8
15	302453	SEAT	VALVE SPRING UPPER	8
16	200873	SPRING	VALVE	8
17	200647	SEAL	VALVE STEM	8
18	299445	STUD	ROCKER BRACKET	4
19	200751	VALVE	EXHAUST	4
20	200750	VALVE	INLET	4
21	301713	SETSCREW		1
22	200874	CAMSHAFT	ASSEMBLY - INCLUDES REF #'S 21, 25-27 & 29	1
23	200767	PUSHROD		8
24	200849	TAPPET		8
26	200768	STOPPER	CAMSHAFT	1
27	200770	GEAR	CAMSHAFT	1
28	044497	SLEEVE	RAW WATER PUMP	1
29	035799	CAPSCREW	M 6 X 14 JIS W/LW	2
30	200793	RING	RETAINING (EXTERNAL)	1
31	200795	THRUSTWASHER	IDLER GEAR	1
32	200878	BUSHING	IDLER GEAR	1
33	200877	GEAR	IDLER ASSEMBLY - INCLUDES REF # 32	0
34	200794	THRUSTWASHER	IDLER GEAR	1
35	035800	CAPSCREW	M 6 X 16 JIS 6 W/ LW	3
36	200792	SHAFT	IDLER GEAR	1

Engine parts from Torrsen Marine - www.torresen.com - 231-759-8596

Engine parts from Torrsen Marine - www.torresen.com - 231-759-8596

THROTTLE AND GOVERNOR ASSEMBLIES

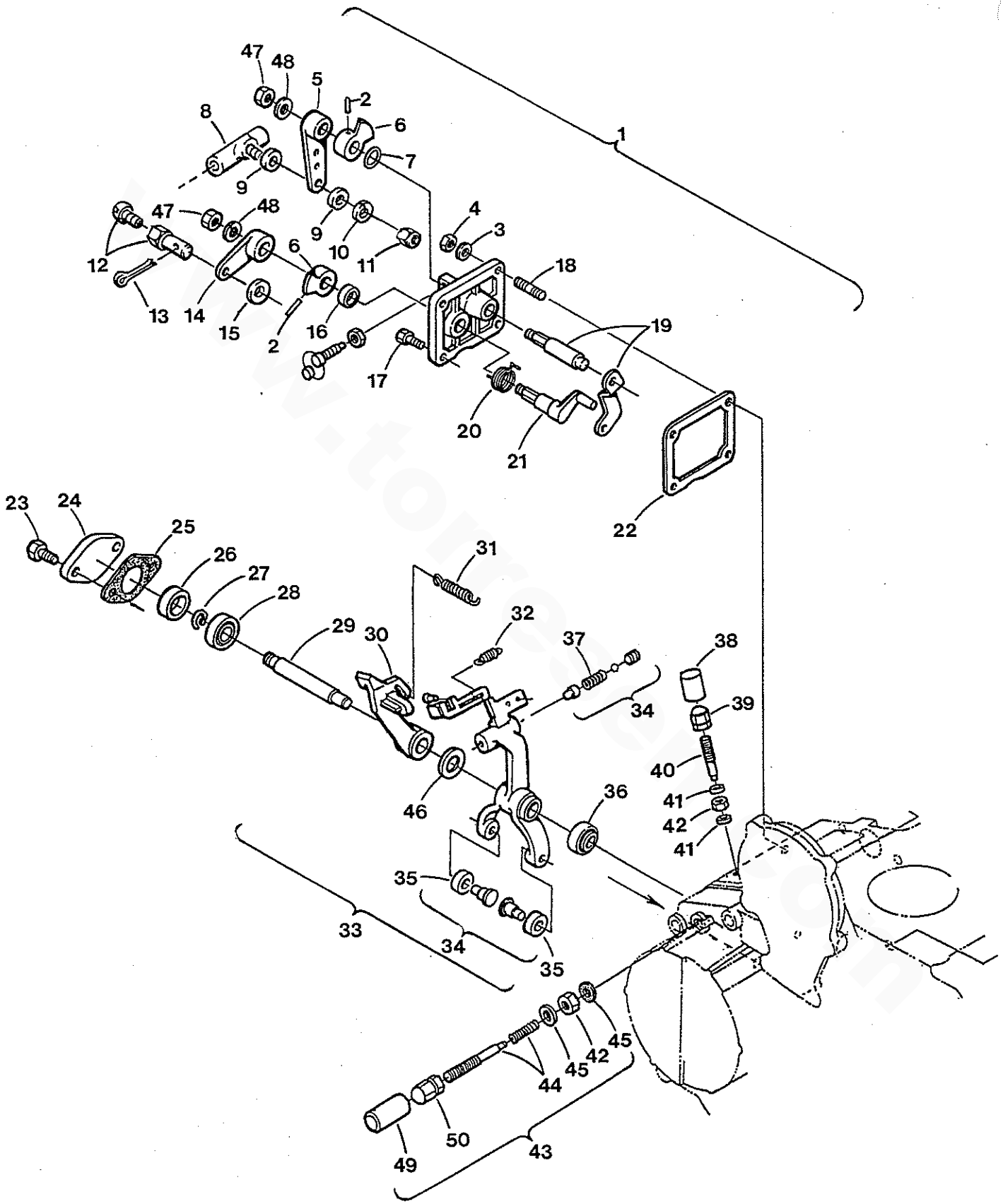

Engine parts from Torrsen Marine - www.torresen.com - 231-759-8596

Engine parts from Torrsen Marine - www.torresen.com - 231-759-8596

THROTTLE AND GOVERNOR ASSEMBLIES

Reference #	Part #	Part Name	Remarks	Quantity
1-1	200890	LEVER	THROTTLE ASSY-M-25XPB-REF# 2-7,14,16,19-21	1
1-2	200914	LEVER	THROTTLE ASSY-M35/40B-REF# 2-7,14,16,19-21	1
2	301498	PIN	SPRING	2
3	015812	NUT	M 6 DIN 934	2
4	031783	LOCKWASHER	M 6 DIN 127	2
5	200891	LEVER	THROTTLE	1
6	200818	LEVER	THROTTLE	1
7-1	298680	O-RING	M-25XPB	1
7-2	200630	O-RING	M-35B / M-40B	1
8	033482	BALLJOINT	1/4" NF MALE 10-32 FEM	1
9	031753	WASHER	FLAT, 1/4" SAE (STEEL)	2
10	031752	LOCKWASHER	SPLIT 1/4 MED (STEEL)	1
11	031754	NUT	1/4-28 NF HEX (STEEL ZINC)	1
12	299864	PIVOT	STOP LEVER	1
13	011796	PIN	COTTER, 1/16 X 1/2	1
14	200892	LEVER	ENGINE STOP	1
15	031784	WASHER	M 6 DIN 125	1
16	200673	SEAL	OIL	1
17-1	035800	CAPSCREW	M 6 X 16 JIS 6 W/ LW - M-25XPB	2
17-2	038500	CAPSCREW	M 6 X 16 JIS W/LW - M-35B / M-40B	1
17-3	299365	CAPSCREW	M 6 X 18 JIS - M-35B / M-40B	1
17-4	301241	GASKET	M-35B / M-40B	1
18-1	301507	STUD	M-25XPB	2
18-2	200839	STUD	M-35B / M-40B	2
19	200887	LEVER	GOVERNOR ASSEMBLY	1
20	200727	SPRING	RETURN	1
21	200893	SHAFT	STOP LEVER	1
22	200862	GASKET	THROTTLE LEVER PLATE	1
23	035799	CAPSCREW	M 6 X 14 JIS W/LW	2
24	200815	COVER	FORK LEVER SHAFT	1
25	200913	GASKET	GOVERNOR COVER	1
26	200814	COLLAR		1
27	200625	RING	RETAINING (EXTERNAL)	1
28	200816	BEARING	BALL	1
29	200813	SHAFT	FORK LEVER	1
30-1	200888	LEVER	FORK - M-25XPB	1
30-2	200726	LEVER	FORK - M-35B / M-40B	1
31	200909	SPRING	GOVERNOR	1
32-1	200855	SPRING	START - M-25XPB	1
32-2	200889	SPRING	START - M-35B / M-40B	1
33-1	200719	LEVER	GOV ASSY-M-25XPB-INC REF 29,30,34,35,37,46	1
33-2	200720	LEVER	GOV ASSY-M35/40B-INC REF# 29,30,34,35,37,46	1
34-1	200717	LEVER	FORK ASSEMBLY-M-25XPB	1
34-2	200718	LEVER	FORK ASSEMBLY - M-35B / M-40B	1
35	201002	ROLLER	GOVERNOR	2
36	200817	BEARING	BALL	1
37	200716	SPRING	M-25XPB	1
38-1	200721	CAP	IDLE ADJUSTING SCREW - M-25XPB	1
38-2	200648	CAP	LOCK - M-35B/M-40B	1
39	302746	NUT	CAP	1
40	200805	BOLT	ADJUSTING	1
41-1	301241	GASKET	M-25XPB	2
41-2	301241	GASKET	M-35B / M-40B	1

Engine parts from Torrsen Marine - www.torresen.com - 231-759-8596

Engine parts from Torrsen Marine - www.torresen.com - 231-759-8596

THROTTLE AND GOVERNOR ASSEMBLIES

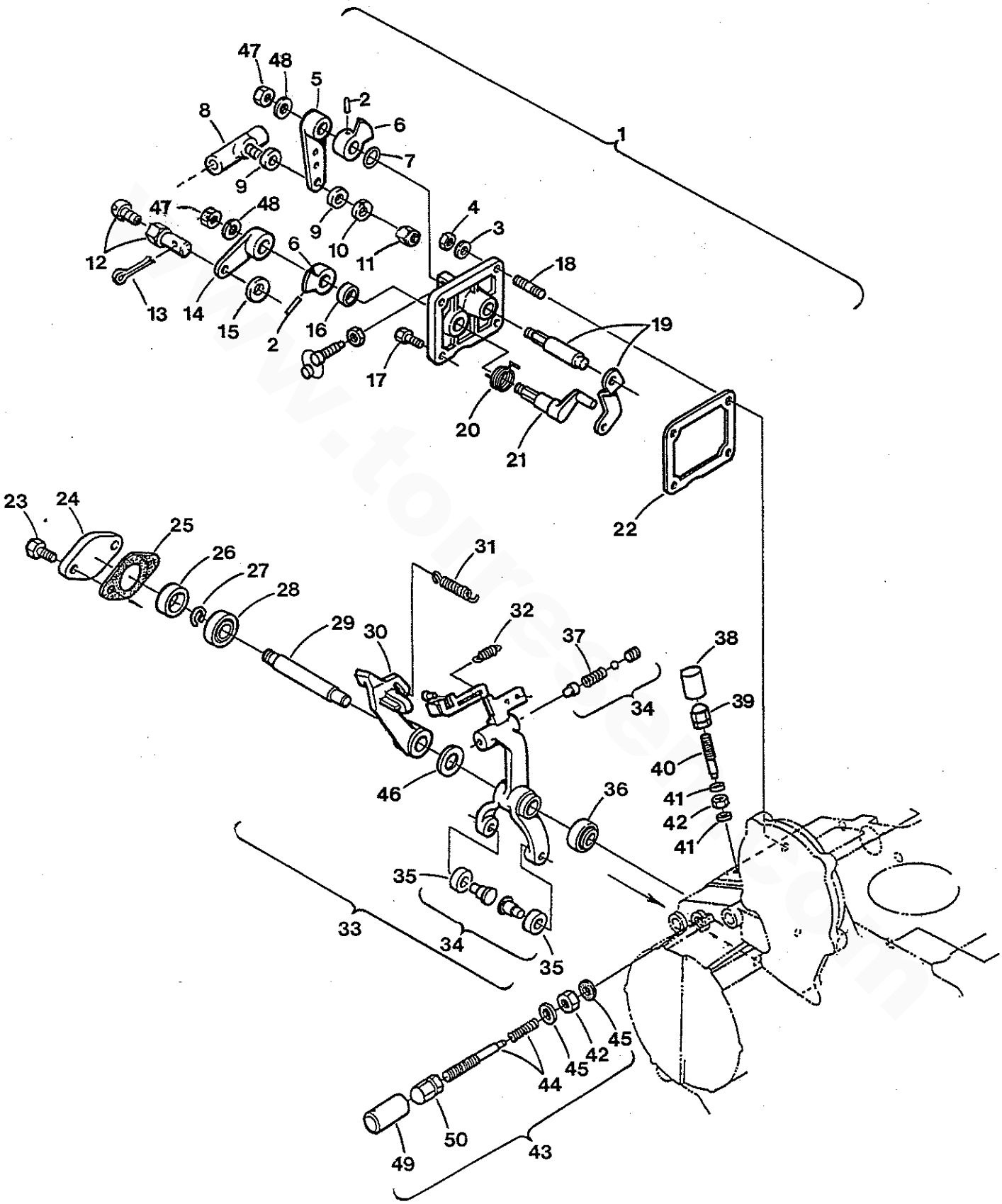

Engine parts from Torrsen Marine - www.torresen.com - 231-759-8596

Engine parts from Torrsen Marine - www.torresen.com - 231-759-8596

THROTTLE AND GOVERNOR ASSEMBLIES

Reference #	Part #	Part Name	Remarks	Quantity
41-3	200650	WASHER	COPPER - M-35B / M-40B	1
42-1	301581	NUT	HEX - M-25XPB	2
42-2	200649	NUT	LOCKING - M-35B / M-40B	1
42-3	301581	NUT	HEX - M-35B / M-40B	1
43	200907	IDLER	ADJUSTING, ASSEMBLY	1
44	200908	BOLT	ADJUSTING	1
45	301241	GASKET		2
46	201023	WASHER	FORK LEVER	1
47	045545	NUT	M 6 KEPS	2
48	031753	WASHER	1/4 FLAT	2
49	200721	CAP	LOCKING	1
50	302746	NUT	CAP	1

www.torresen.com

Engine parts from Torrsen Marine - www.torresen.com - 231-759-8596

Engine parts from Torrsen Marine - www.torresen.com - 231-759-8596

FUEL LIFT PUMP, SOLENOID AND FUEL RETURN

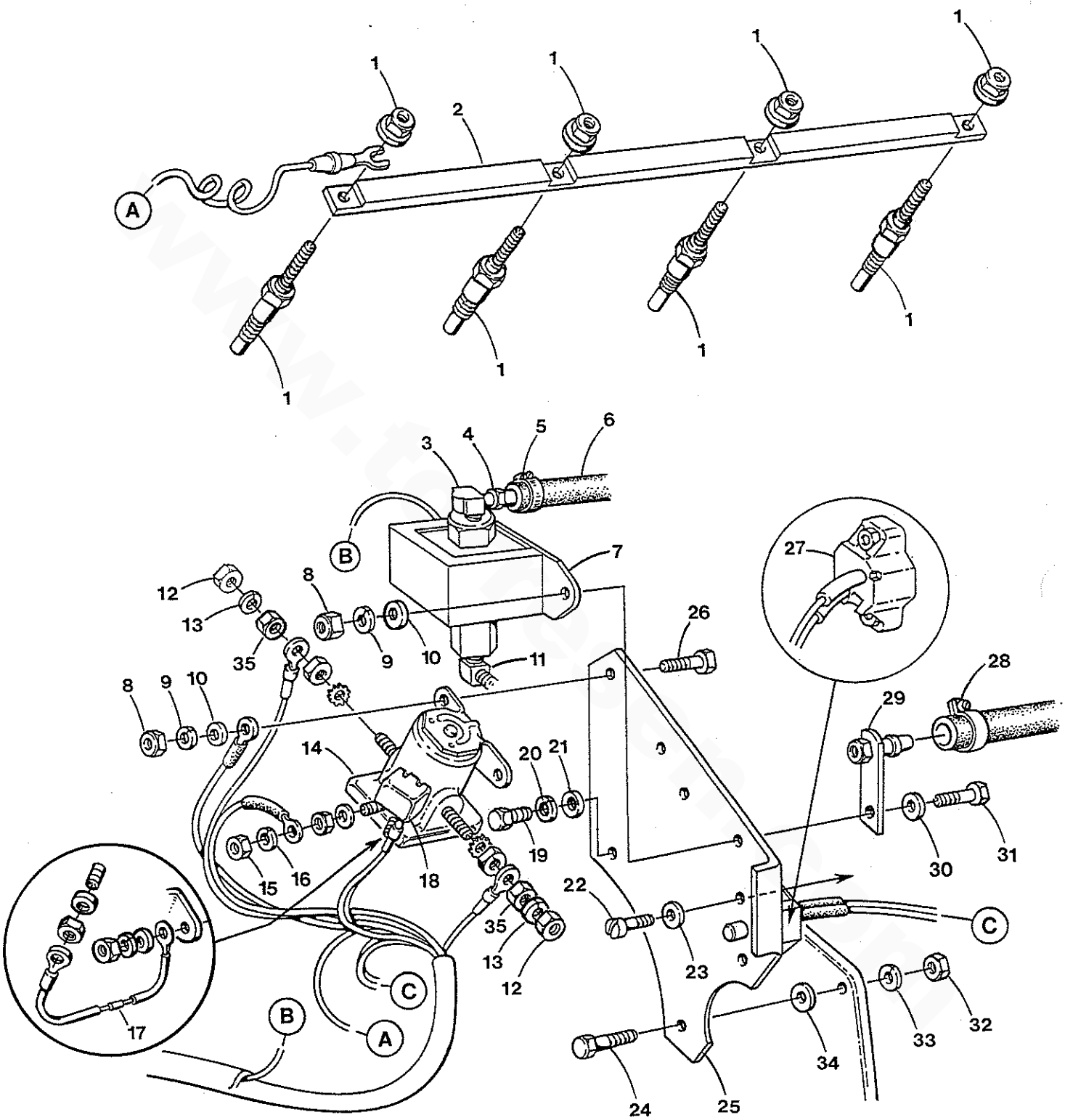

Engine parts from Torrsen Marine - www.torresen.com - 231-759-8596

Engine parts from Torrsen Marine - www.torresen.com - 231-759-8596

FUEL LIFT PUMP, SOLENOID AND FUEL RETURN

Reference #	Part #	Part Name	Remarks	Quantity
1-1	200595	GLOWPLUG	12VDC - M-25XPB	3
1-2	200595	GLOWPLUG	12VDC - M-35B / M-40B	4
2-1	200856	STRAP	GLOW PLUG CONNECTING - M-25XPB	1
2-2	200894	STRAP	GLOWPLUG CONNECTING - M-35B / M-40B	1
3	022513	ELBOW	ADAPTER	1
4	021485	ADAPTER	5/16 TUBE 1/2-20 MALE SW	1
5	017298	CLAMP	HOSE	1
6-1	039140	HOSE	FUEL,5/16 ID - M-25XPB - INCHES REQ'D	15
6-2	039140	HOSE	FUEL,5/16 ID - M-35B / M-40B - INCHES REQ'D	13
7	039275	PUMP	FUEL LIFT 12VDC	1
8	031750	NUT	HEX,1/4-20 MED (STEEL)	4
9	031752	LOCKWASHER	SPLIT 1/4 MED (STEEL)	4
10	031753	WASHER	FLAT, 1/4" SAE (STEEL)	4
11	013340	ELBOW	1/8 NPT 90 DEG STREET (BRASS)	1
12	031760	NUT	5/16-24 NF HEX (STEEL) ZINC	2
13	031758	LOCKWASHER	SPLIT, 5/16 MED (STEEL)	2
14	024639	SOLENOID	PREHEAT,24VDC	1
15	031847	NUT	HEX,10-32 MACHINE (STAINLESS)	2
16	031849	LOCKWASHER	SPLIT, 10 MED (STAINLESS)	2
17	039806	RESISTOR	ASSEMBLY, PROPULSION ALARM	1
18	036563	BREAKER	CIRCUIT,10 AMP	1
19	024955	CAPSCREW	M 10 X 1.25 X 45 DIN 960	1
20	019262	LOCKWASHER	M 10 DIN 127	1
21	031789	WASHER	M 10 DIN 125	1
22	043480	SCREW	HEX WASHER HD,8-32 X 7/8 SS	2
23	031843	WASHER	FLAT, 8 SS AN960	1
24	018811	CAPSCREW	M 8 X 40 DIN 931	1
25	200258	BRACKET	SOLENOID BREAKER PUMP	1
26	031503	CAPSCREW	1/4 NC X 3/4	3
27	024683	BREAKER	CIRCUIT,20 AMP,12VDC	1
28	040384	CLAMP	HOSE, MINI	1
29	299830	CONNECTOR	FUEL RETURN ASSEMBLY	1
30	031753	WASHER	FLAT, 1/4" SAE (STEEL)	1
31	031505	CAPSCREW	1/4 NC X 1"	1
32	018242	NUT	M 8 DIN 934	1
33	031786	LOCKWASHER	M 8 DIN 127	1
34	042225	SPACER		2
35	031760	NUT	HEX 5/16 NF (STEEL ZINC)	2

Engine parts from Torrsen Marine - www.torresen.com - 231-759-8596

Engine parts from Torrsen Marine - www.torresen.com - 231-759-8596

FRESH WATER COOLING SYSTEM

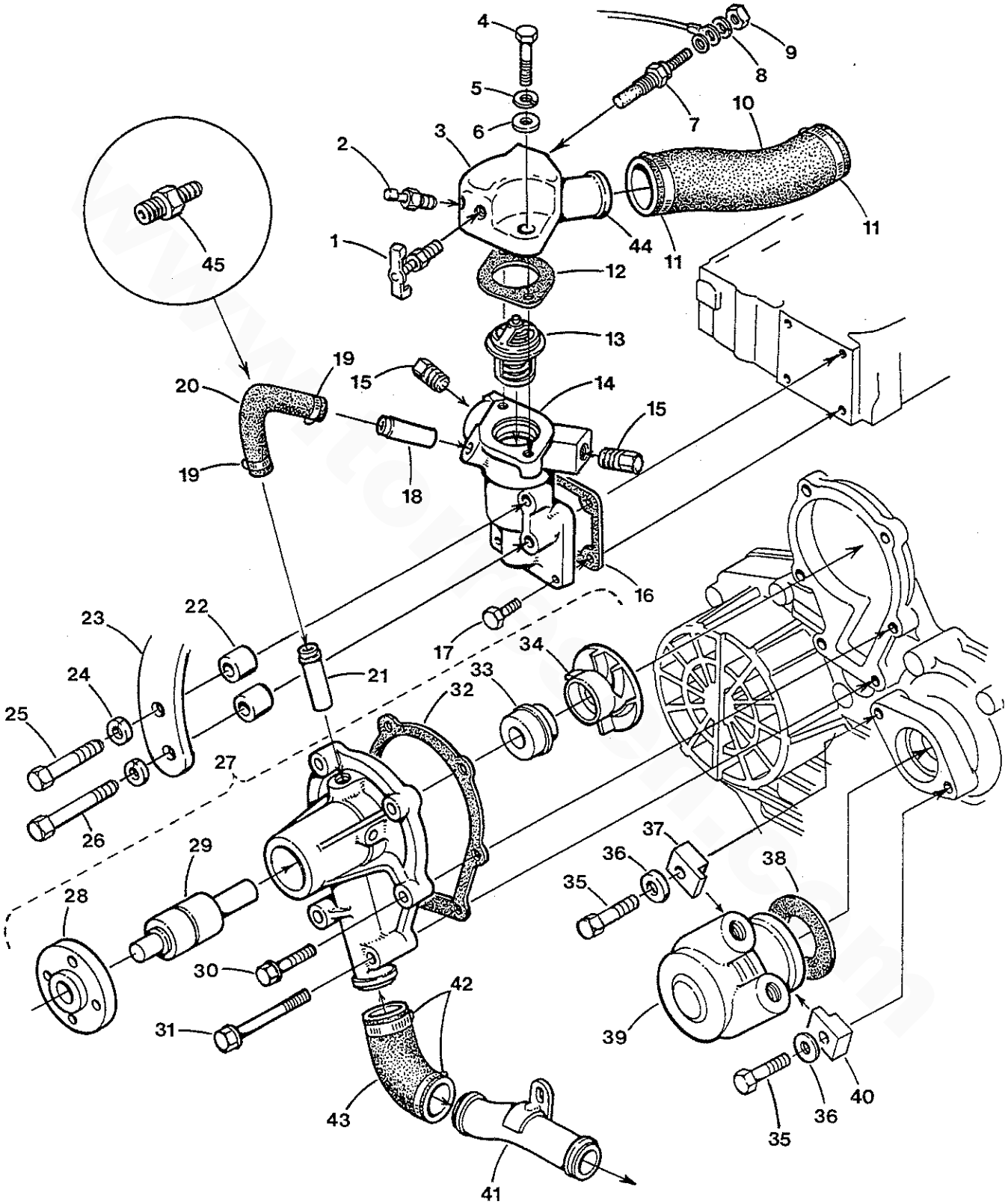

Engine parts from Torrsen Marine - www.torresen.com - 231-759-8596

Engine parts from Torrsen Marine - www.torresen.com - 231-759-8596

FRESH WATER COOLING SYSTEM

Reference #	Part #	Part Name	Remarks	Quantity
1	011471	PETCOCK	1/8NPT EXT SEAT (BRASS)	1
2	030125	SWITCH	WATER TEMPERATURE ALARM	1
3-1	200422	HOUSING	THERMOSTAT TO MAR 1998 - 38 MM	1
3-2	200502	HOUSING	THERMOSTAT FROM MAR 1998 - 44 MM	1
4-1	035790	CAPSCREW	M 6 X 50 JIS 4 W/LW TO MAR 1998	2
4-2	021558	CAPSCREW	M 8 X 35 DIN 933 FROM MAR 1998	2
5	031786	LOCKWASHER	M 8 DIN 127	2
6-1	031784	WASHER	M 6 DIN 125 TO MAR 1998	2
6-2	031787	WASHER	M 8 DIN 125 FROM MAR 1998	2
7-1	035109	SENDER	WATER TEMPERATURE	1
7-2	019369	PLUG	1/8 NPT	1
7-3	022131	BUSHING	1/4NPT TO 1/8NPT	1
8	031849	LOCKWASHER	10	1
9	031847	NUT	10-32	1
10-1	200428	HOSE	THERM TO MANIFOLD TO MAR 1998	1
10-2	015774	HOSE	1-1/8 WIRE INSERTED FROM MAR 1998	1
11	011405	CLAMP	HOSE 16	2
12-1	300237	GASKET	THERM - 301358 -38 MM - TO MAR 1998	1
12-2	298843	GASKET	THERM - 201001 -44 MM - FROM MAR 1998	1
13-1	301358	THERMOSTAT	160F - 38 MM OD TO MAR 1998	1
13-2	201001	THERMOSTAT	160F - 44 MM OD FROM MAR 1998	1
14-1	200952	HOUSING	LOWER THERM INC #18-38 MM TO MAR 1998	1
14-2	200949	HOUSING	LOWER THERM INC #18-44 MM FROM MAR 1998	1
15	201000	PLUG	HEX HEAD	2
16	200863	GASKET	LOWER THERMOSTAT	1
17	035800	CAPSCREW	M 6 X 16 JIS 6 W/ LW	3
18	200824	NIPPLE	BYPASS	1
19	024906	CLAMP	HOSE 04 MINI	2
20-1	200823	HOSE	THERMOSTAT BYPASS	1
20-2	300236	HOSE	WATER HEATER OPTION	2
21	200822	NIPPLE	WATER PUMP BYPASS	1
22	044098	SPACER		2
23	200438	STRAP	ALTERNATOR ADJUSTING	1
24	031783	LOCKWASHER	M 6 DIN 127	2
25	031824	CAPSCREW	M 6 X 35 DIN 933	1
26	034212	CAPSCREW	M 6 X 75 DIN 931	1
27	200820	PUMP	FRESH WATER	1
28	200826	FLANGE	WATER PUMP PULLEY	1
29	200827	BEARING	WATER PUMP	1
30-1	043066	CAPSCREW	M 6 X 30 JIS 7 W/LOCKWASHER - M-25XPB	4
30-2	041424	CAPSCREW	M 6 X 25 JIS-FLANGE DOG POINT - M-35B/M-40B	4
31-1	034398	CAPSCREW	M 6 X 80 DIN 931	2
31-2	031783	LOCKWASHER	M 6 DIN 127	2
32	200857	GASKET	FRESH WATER PUMP	1
33	200821	SEAL	WATER PUMP	1
34	200825	IMPELLER	WATER PUMP	1
35	020628	CAPSCREW	M 6 X 25 DIN 933	2
36	031783	LOCKWASHER	M 6 DIN 127	2
37	200419	CLAMP	RAW WATER PUMP MOUNT	1
38	302678	GASKET	RAW WATER PUMP MOUNT	1
39	042175	PUMP	RAW WATER	1
40	200418	CLAMP	RAW WATER MOUNT	1
41	200961	LINE	FRESH WATER PUMP	1

Engine parts from Torrsen Marine - www.torresen.com - 231-759-8596

Engine parts from Torrsen Marine - www.torresen.com - 231-759-8596

FRESH WATER COOLING SYSTEM

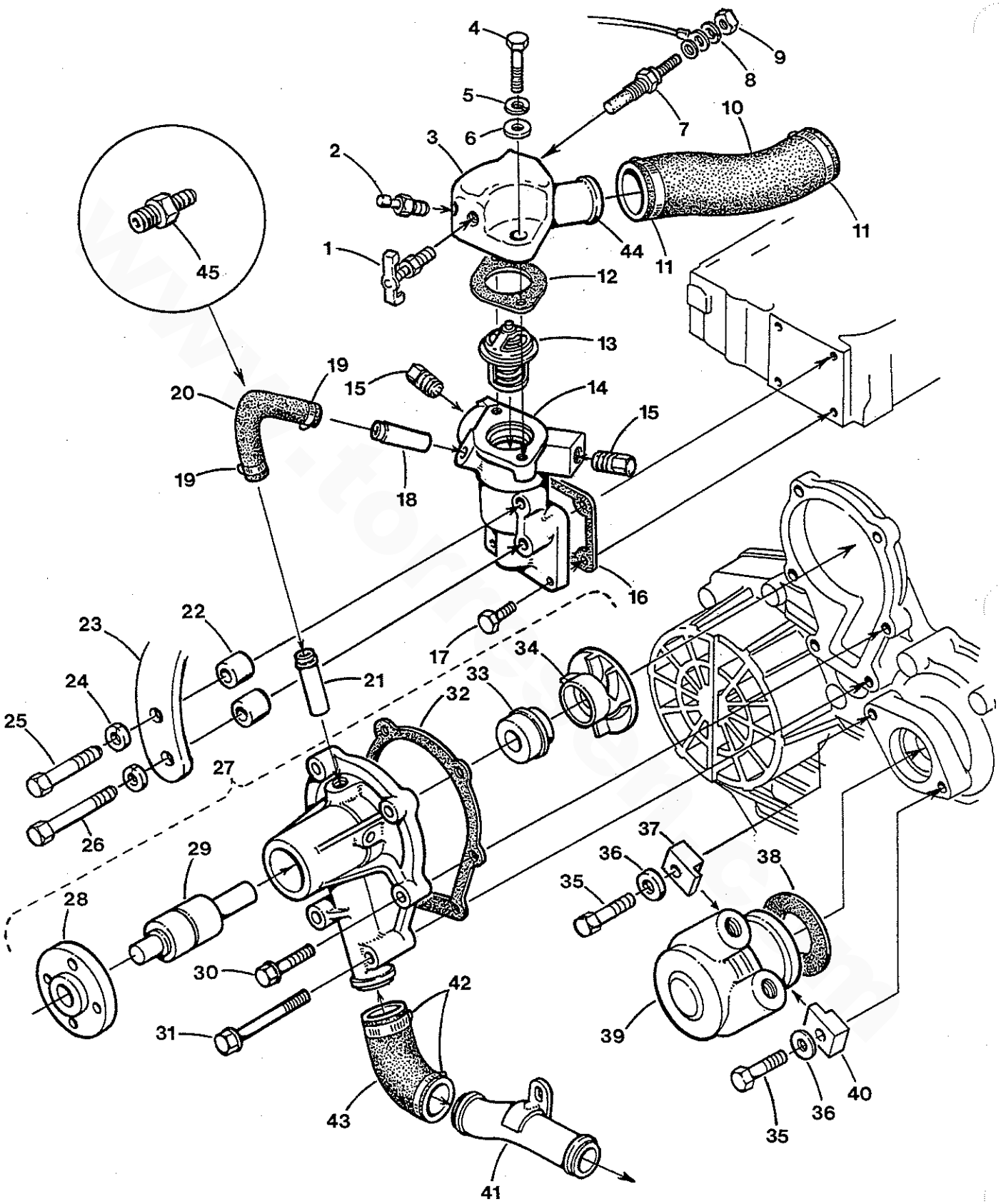

Engine parts from Torrsen Marine - www.torresen.com - 231-759-8596

Engine parts from Torrsen Marine - www.torresen.com - 231-759-8596

FRESH WATER COOLING SYSTEM

Reference #	Part #	Part Name	Remarks	Quantity
42	011405	CLAMP	HOSE 16	1
43	200819	HOSE	WATER PUMP, IN	1
44	200503	NIPPLE	3/4 NPT X 1-1/8 HOSE HOUSING 200502	1
45	302391	ADAPTER	HOSE 3/8 X 5/8 ID - HEATER OPTION	1

www.torresen.com

Engine parts from Torrsen Marine - www.torresen.com - 231-759-8596

Engine parts from Torrsen Marine - www.torresen.com - 231-759-8596

RAW WATER PUMP

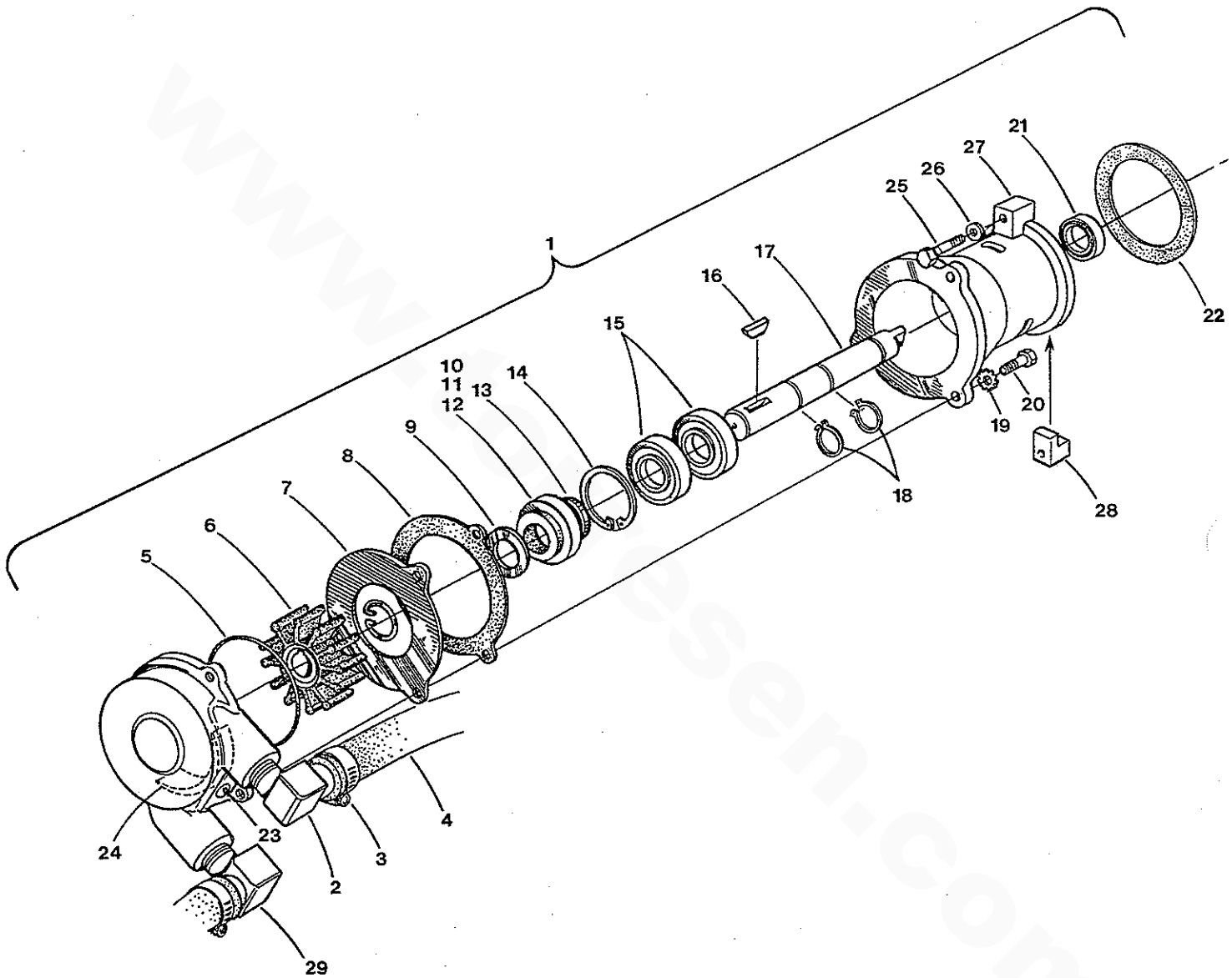

Engine parts from Torrsen Marine - www.torresen.com - 231-759-8596

Engine parts from Torrsen Marine - www.torresen.com - 231-759-8596

RAW WATER PUMP

Reference #	Part #	Part Name	Remarks	Quantity
1	042175	PUMP	RAW WATER INCLUDES REF #'S 6 - 20	1
2	030183	ELBOW	1/2 NPT X 7/8 HOSE 90 DEG	1
3	011386	CLAMP	HOSE 12	1
4	019059	HOSE	7/8 INCH WIRE INSERTED - INCHES REQ'D	26
5	302877	O-RING		1
6	200175	IMPELLER KIT	INCLUDES REF #'S 5,6 & 8	1
7	302878	PLATE	PUMP END	1
8	302879	GASKET	PUMP	1
9	302876	WASHER	FLAT	1
10	302885	SEAL	PUMP,ASSEMBLY	1
11	302880	SEAT	SEAL	1
12	302881	SEAL	WATER PUMP	1
13	302866	SLINGER	PUMP	1
14	018146	RING	RETAINING (INTERNAL)	1
15	302884	BEARING	BALL	2
16	302874	KEY	WOODRUFF #61	1
17	200536	SHAFT	WATER PUMP	1
18	018145	RING	RETAINING (EXTERNAL)	3
19	032183	LOCKWASHER	1/4	3
20	018143	CAPSCREW	IMPELLER COVER	3
21	303172	SEAL	PUMP	1
22	302678	GASKET	RAW WATER PUMP MOUNT	1
23	302871	SCREW	CAM	1
24	302872	CAM	PUMP	1
25	020628	CAPSCREW	M 6 X 25 DIN 933	2
26	031783	LOCKWASHER	M 6 DIN 127	2
27	200419	CLAMP	RAW WATER PUMP MOUNT	1
28	200418	CLAMP	RAW WATER MOUNT	1
29	302217	ELBOW	1/2 NPT x 5/8 HOS, 90 DEG	1
30	200176	PUMP KIT	REBUILD	1

Engine parts from Torrsen Marine - www.torresen.com - 231-759-8596

Engine parts from Torrsen Marine - www.torresen.com - 231-759-8596

BELL HOUSING AND TRANSMISSION

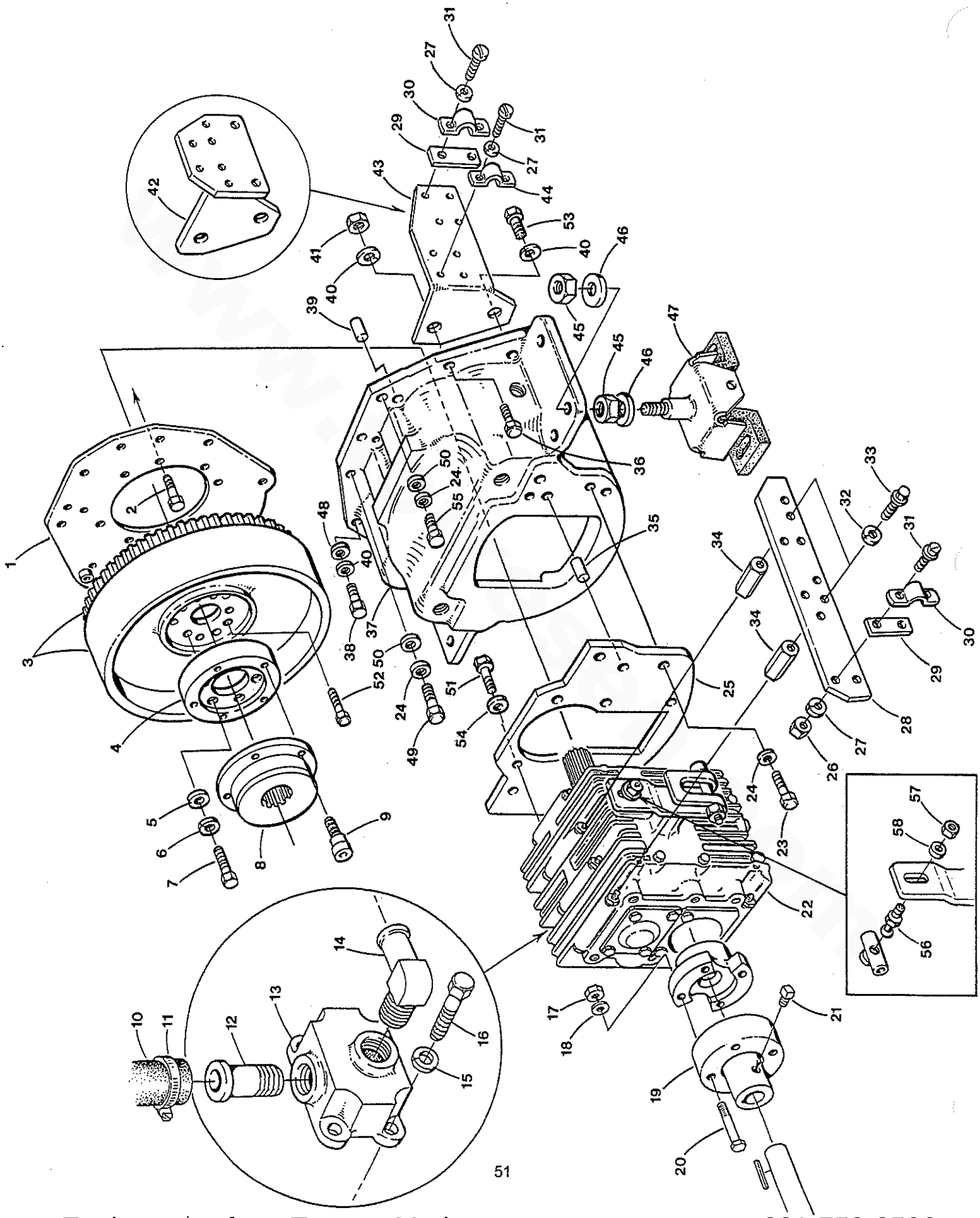

Engine parts from Torrsen Marine - www.torresen.com - 231-759-8596

Engine parts from Torrsen Marine - www.torresen.com - 231-759-8596

BELL HOUSING AND TRANSMISSION

Reference #	Part #	Part Name	Remarks	Quantity
1	200741	PLATE	BACK END	1
2	300172	BOLT	PLATE	8
3-1	200957	FLYWHEEL	ASSEMBLY - M-25XPB	1
3-2	200950	FLYWHEEL	ASSEMBLY - M-35B / M-40B	1
3-3	299505	GEAR	RING	1
4	200444	ADAPTER	DAMPER PLATE MOUNTING	1
5	031789	WASHER	M 10 DIN 125	6
6	019262	LOCKWASHER	M 10 DIN 127	6
7	024952	CAPSCREW	M 10 X 1.25 X 25 DIN 961	6
8	044624	DAMPER		1
9	200443	SCREW	SHOULDER, DAMPER	5
10	011779	HOSE	1" WIRE INSERTED - INCHES REQ'D	21
11	011405	CLAMP	HOSE 16	2
12	036622	NIPPLE	HOSE 3/4NPT TO 1	1
13	040036	COOLER	HBW TRANSMISSION - OPTIONAL	1
14	036614	ELBOW	HOSE 3/8NPT TO 1	1
15	031786	LOCKWASHER	M 8 DIN 127	4
16	017196	CAPSCREW	M 8 X 20 DIN 933	4
17	024950	NUT	M 10 X 1.25 DIN 934	4
18	019262	LOCKWASHER	M 10 DIN 127	4
19-1	023706	COUPLING	HBW, 0.75 BORE	1
19-2	023707	COUPLING	HBW, 0.875 BORE	1
19-3	023708	COUPLING	HBW, 1.0 BORE	1
19-4	023709	COUPLING	HBW, 1.125 BORE	1
19-5	023710	COUPLING	HBW, 1.25 BORE	1
19-6	023711	COUPLING	HBW, 1.375 BORE	1
19-7	023712	COUPLING	HBW, 1.5 BORE	1
20	031228	CAPSCREW	M 10 X 1.25 X 30 DIN 961	4
21	023652	SETSCREW	COUPLING 3/8 NC X 1	2
22-1	300115	TRANSMISSION	2:1 HBW 50-2R - M-25XPB	1
22-2	300116	TRANSMISSION	1.8:1 HBW100-2R - M-35B	1
22-3	300117	TRANSMISSION	1.9:1 HBW150-2R - M-40B	1
22-4	299942	TRANSMISSION	2.1:1 HBW150V-2R - V-DRIVE OPTION	1
23	013629	CAPSCREW	M 10 X 25 DIN 933	6
24	019262	LOCKWASHER	M 10 DIN 127	8
25-1	200333	ADAPTER	HBW 35-150	1
25-2	200371	ADAPTER	HBW 150V - V-DRIVE OPTION	1
26	031847	NUT	HEX,10-32 MACHINE (STAINLESS)	2
27	031849	LOCKWASHER	SPLIT, 10 MED (STAINLESS)	6
28	032161	BRACKET	SHIFT CABLE	1
29	013870	SHIM	CABLE CLAMP	2
30	013325	CLAMP	CABLE	2
31	031873	SCREW	10-32 X 5/8 (STAINLESS)	6
32	031786	LOCKWASHER	M 8 DIN 127	2
33	013630	CAPSCREW	M 8 X 25 DIN 933	2
34	030756	NUT	PILLAR, M 8 X 1.25	2
35	019039	DOWEL		2
36	018811	CAPSCREW	M 8 X 40 DIN 931	1
37	200365	HOUSING	FLYWHEEL	1
38	298539	CAPSCREW	M 8 X 28 DIN 933	5
39	301037	DOWEL		2
40	031786	LOCKWASHER	M 8 DIN 127	7
41	018242	NUT	M 8 DIN 934	1

Engine parts from Torrsen Marine - www.torresen.com - 231-759-8596

Engine parts from Torrsen Marine - www.torresen.com - 231-759-8596

BELL HOUSING AND TRANSMISSION

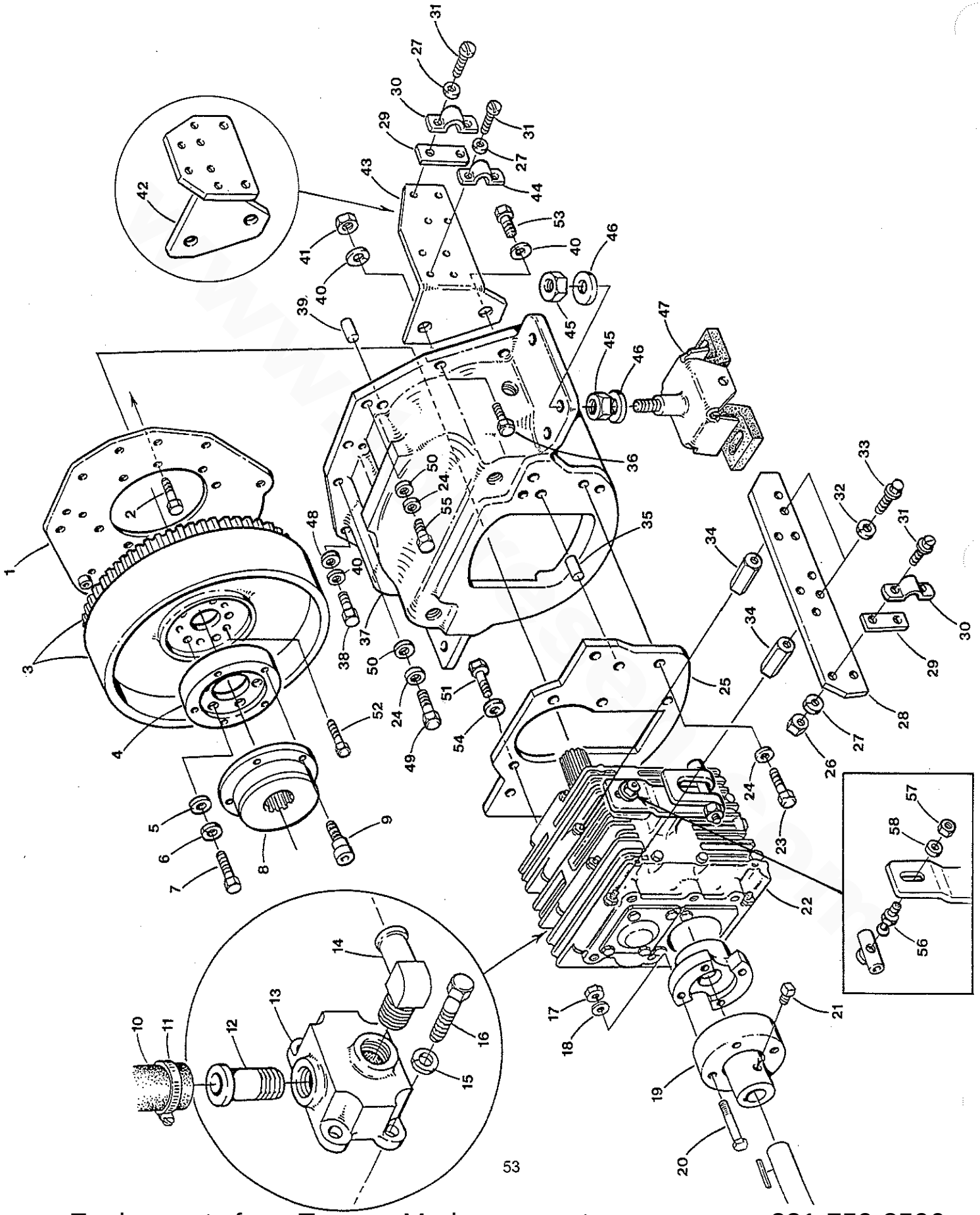

Engine parts from Torrsen Marine - www.torresen.com - 231-759-8596

Engine parts from Torrsen Marine - www.torresen.com - 231-759-8596

BELL HOUSING AND TRANSMISSION

Reference #	Part #	Part Name	Remarks	Quantity
42	200433	BRACKET	THROTTLE CONTROL CABLE - M-25XPB	1
43	200434	BRACKET	THROTTLE CONTROL BRACKET - M-35B / M-40B	1
44	013871	CLAMP	FUEL SHUT-OFF CABLE	1
45	040966	NUT	JAM M 16, SELF-LOCKING	2
46	031828	WASHER	FLAT, 5/8 SAE (STEEL)	2
47	040510	ISOLATOR	MARINE 75-130 LB.	2
48	031787	WASHER	M 8 DIN 125	5
49	024953	CAPSCREW	M 10 X 1.25 X 35 DIN 961	1
50	031789	WASHER	M 10 DIN 125	2
51-1	020650	CAPSCREW	M 8 X 18 DIN 933	6
51-2	018813	CAPSCREW	M 10 X 20 DIN 933	6
52	200796	BOLT	FLYWHEEL	6
53	013630	CAPSCREW	M 8 X 25 DIN 933	1
54-1	031786	LOCKWASHER	M 8 DIN 127	6
54-2	019262	LOCKWASHER	M 10 DIN 127	6
55	024955	CAPSCREW	M 10 X 1.25 X 45 DIN 960	1
56	033482	BALLJOINT	SHIFT CABLE	1
57	031754	NUT	1/4 NF	1
58	031752	LOCKWASHER	1/4	1

www.torresen.com

Engine parts from Torrsen Marine - www.torresen.com - 231-759-8596

Engine parts from Torrsen Marine - www.torresen.com - 231-759-8596

MODEL HBW VERTICAL SHIFTING BRACKET

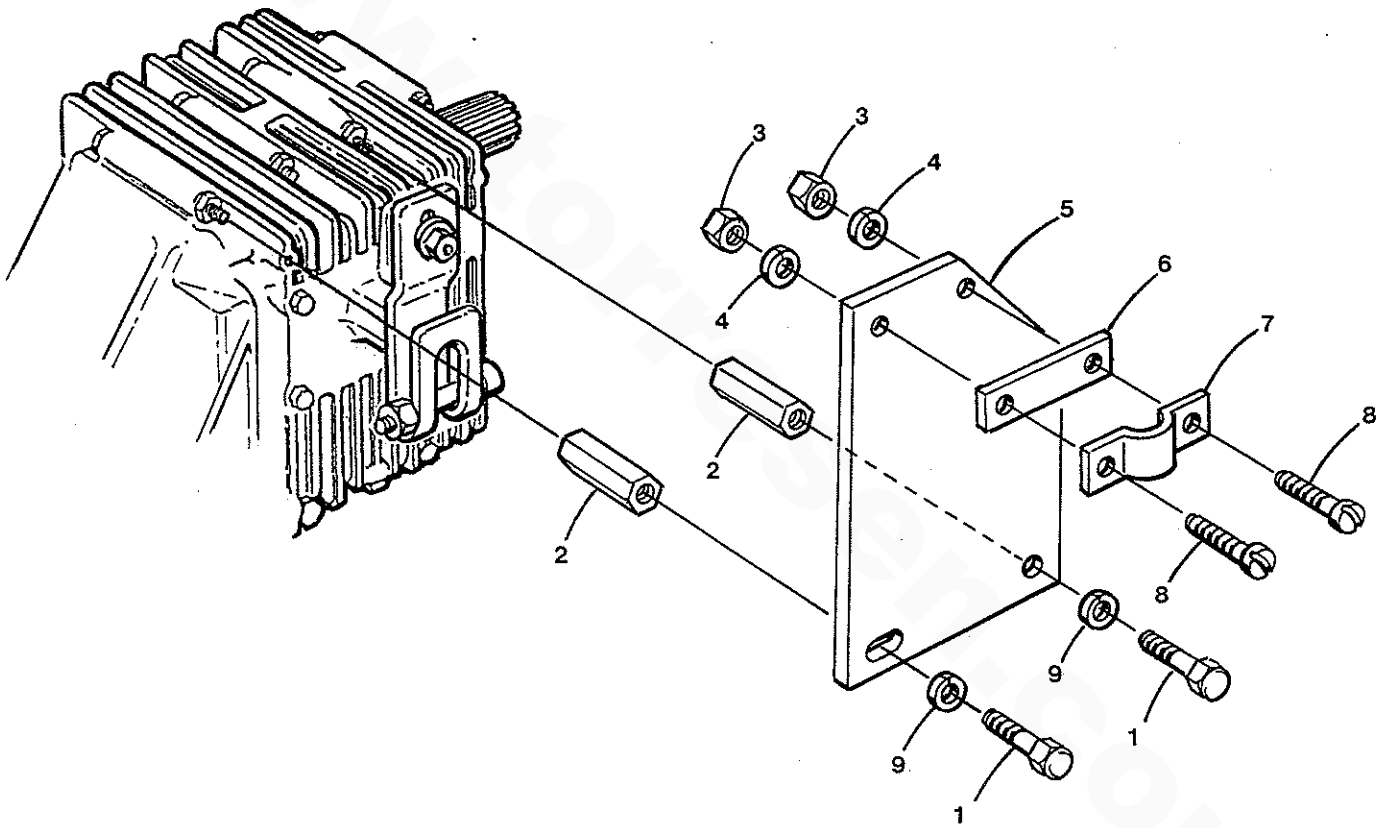

Engine parts from Torrsen Marine - www.torresen.com - 231-759-8596

Engine parts from Torrsen Marine - www.torresen.com - 231-759-8596

MODEL HBW VERTICAL SHIFTING BRACKET

Reference #	Part #	Part Name	Remarks	Quantity
1	013630	CAPSCREW	M 8 X 25 DIN 933	2
2	030756	NUT	PILLAR, M 8 X 1.25	2
3	031847	NUT	HEX,10-32 MACHINE (STAINLESS)	2
4	031849	LOCKWASHER	SPLIT, 10 MED (STAINLESS)	2
5	030181	BRACKET	SHIFT CABLE-TOP ENTRY-HBW GEAR	1
6	013870	SHIM	SHIFT CABLE CLAMP BOTTOM	1
7	013325	CLAMP	SHIFT CABLE	1
8	031873	SCREW	10-32 X 5/8 (STAINLESS)	2
9	031786	LOCKWASHER	M 8 DIN 127	2

www.torresen.com

Engine parts from Torrsen Marine - www.torresen.com - 231-759-8596

Engine parts from Torrsen Marine - www.torresen.com - 231-759-8596

ALTERNATOR ASSEMBLY

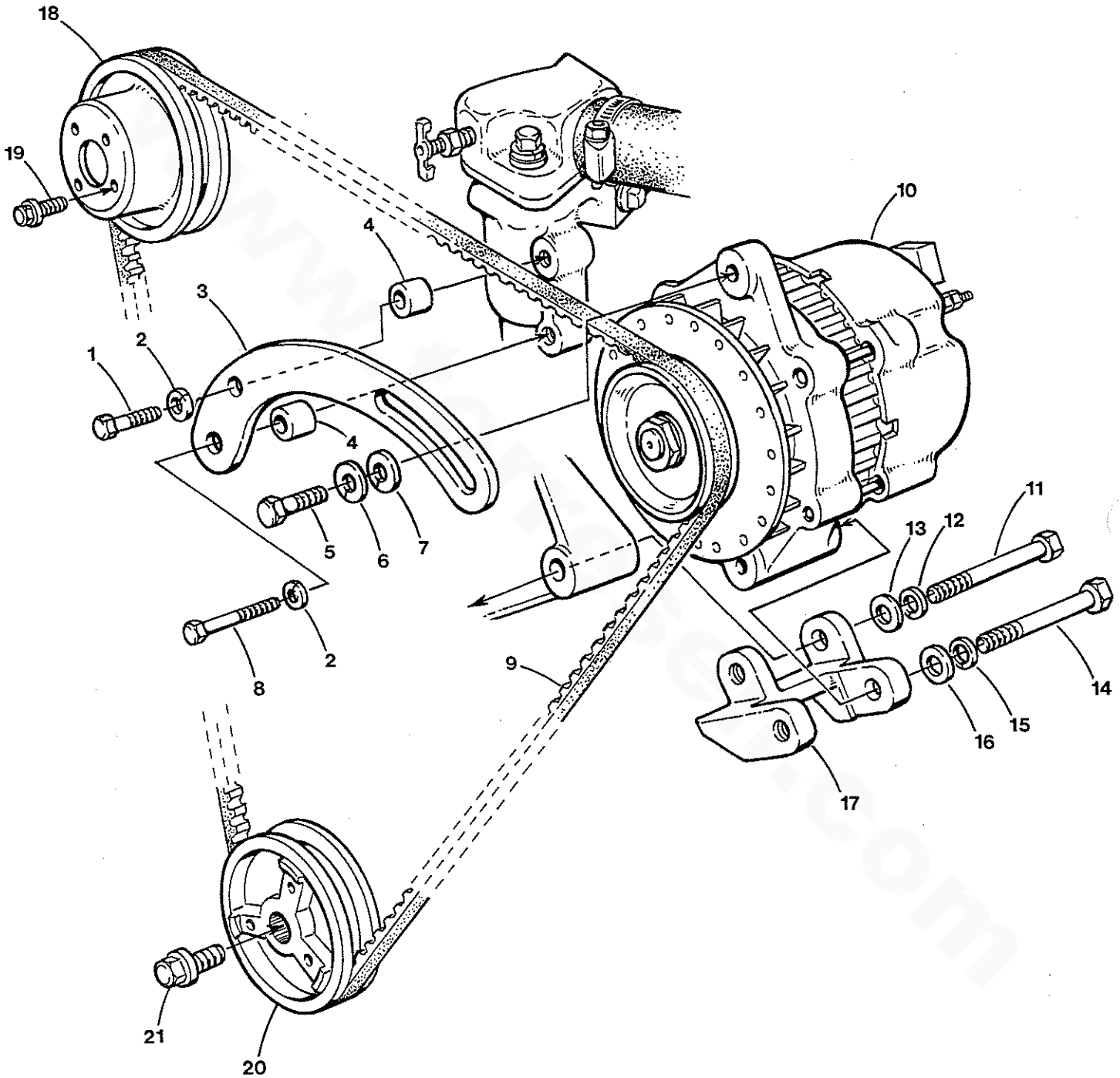

Engine parts from Torrsen Marine - www.torresen.com - 231-759-8596

Engine parts from Torrsen Marine - www.torresen.com - 231-759-8596

ALTERNATOR ASSEMBLY

Reference #	Part #	Part Name	Remarks	Quantity
1	031824	CAPSCREW	M 6 X 35 DIN 933	1
2	031783	LOCKWASHER	M 6 DIN 127	2
3	200438	STRAP	ALTERNATOR ADJUSTING	1
4	044098	SPACER		2
5	031555	CAPSCREW	5/16NC X 1	1
6	031758	LOCKWASHER	SPLIT, 5/16 MED (STEEL)	1
7	033381	WASHER	FLAT	1
8	034212	CAPSCREW	M 6 X 75 DIN 931	1
9	030475	BELT	FAN, 39.5 X 0	1
10-1	041017	ALTERNATOR	12VDC, 51A	1
10-2	300746	ALTERNATOR	12VDC, 72A W/AC TAP - OPTIONAL	1
11	031822	CAPSCREW	M 10 X 1.25 X 75 DIN 960	1
12	019262	LOCKWASHER	M 10 DIN 127	1
13	031789	WASHER	M 10 DIN 125	1
14	031613	CAPSCREW	3/8NC X 3	1
15	031764	LOCKWASHER	SPLIT 3/8 (STEEL)	1
16	031765	WASHER	FLAT, 3/8 (STEEL)	1
17	200436	BRACKET	ALTERNATOR	1
18	200828	PULLEY	FRESH WATER PUMP	1
19	034565	CAPSCREW	M 6 X 10 JIS-FLANGE	4
20-1	200730	PULLEY	CRANKSHAFT - M-25XPB	1
20-2	200840	PULLEY	CRANKSHAFT - M-35B/M-40B	1
21	200829	BOLT	CRANKSHAFT PULLEY	1

Engine parts from Torrsen Marine - www.torresen.com - 231-759-8596

Engine parts from Torrsen Marine - www.torresen.com - 231-759-8596

ELECTRICAL SYSTEM

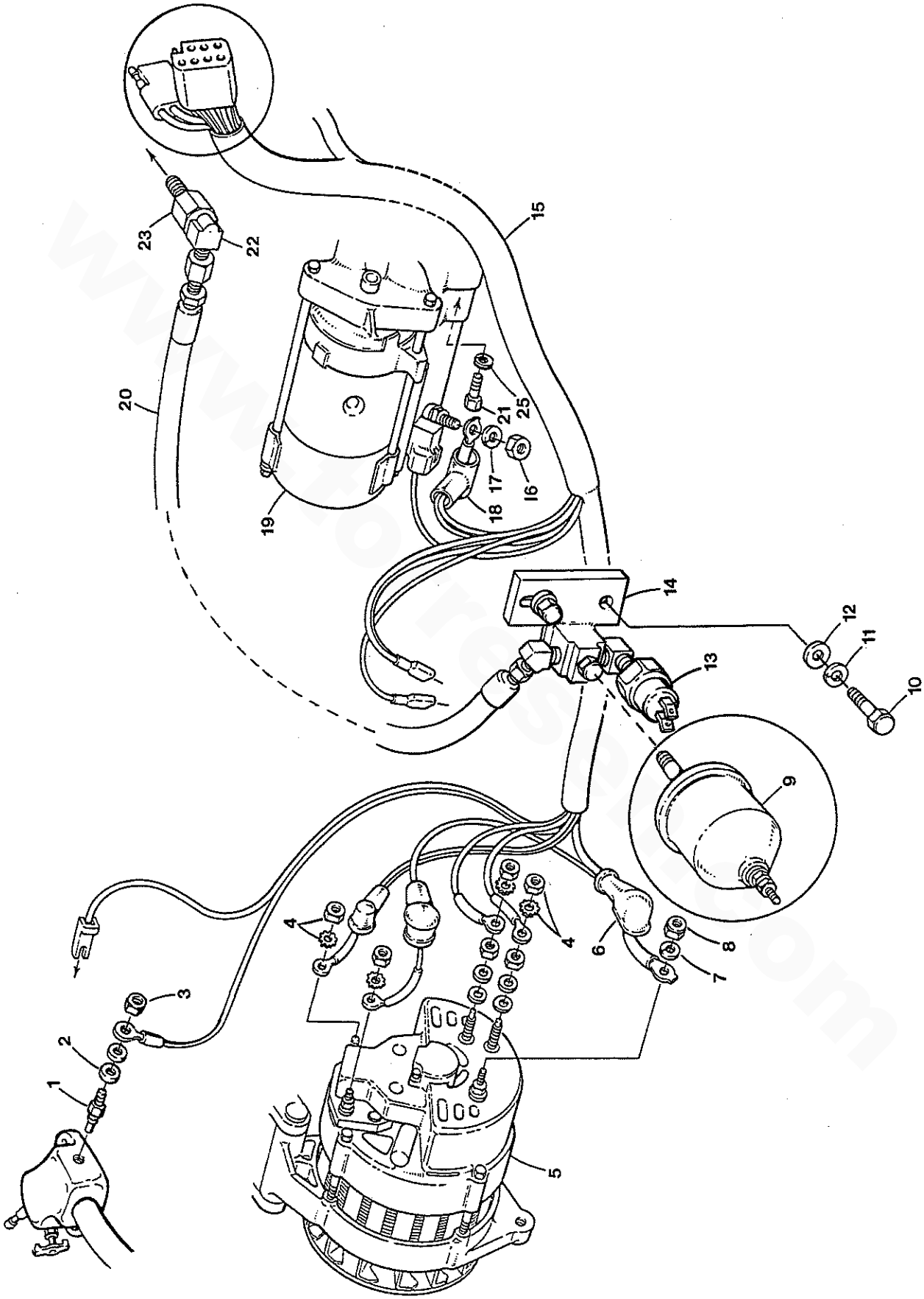

Engine parts from Torrsen Marine - www.torresen.com - 231-759-8596

Engine parts from Torrsen Marine - www.torresen.com - 231-759-8596

ELECTRICAL SYSTEM

Reference #	Part #	Part Name	Remarks	Quantity
1	035109	SENDER	WATER TEMPERATURE	1
2	031849	LOCKWASHER	10	1
3	031847	NUT	10-32	1
4	031904	NUT	10-24, KEPS (STAINLESS)	4
5-1	041017	ALTERNATOR	12VDC, 51A	1
5-2	300746	ALTERNATOR	12VDC, 72A W/AC TAP	1
6-1	303109	BOOT	ALTERNATOR	2
6-2	034472	BOOT	TERMINAL - NOT SHOWN	1
7	031752	LOCKWASHER	SPLIT 1/4 MED (STEEL)	1
8	031750	NUT	HEX, 1/4-20 MED (STEEL)	1
9	024132	SENDER	OIL PRESSURE,12VDC,100 PSI	1
10	024951	CAPSCREW	M 10 X 1.25 X 20 DIN 961	2
11	019262	LOCKWASHER	M 10 DIN 127	2
12	031789	WASHER	M 10 DIN 125	2
13	037323	SWITCH	OIL PRESSURE, NO. 5	1
14	032480	BRACKET	OIL PRESSURE SENDER	1
15-1	200260	HARNESS	MARINE	1
15-2	200268	HARNESS	MARINE - CATALINA OPTION	1
16	018242	NUT	M 8 DIN 934	1
17	031786	LOCKWASHER	M 8 DIN 127	1
18	303107	BOOT	STARTER	1
19-1	200948	MOTOR	STARTER - M-25XPB	1
19-2	200546	MOTOR	STARTER - M-35B / M-40B	1
20	039385	HOSE	OIL	1
21	013619	CAPSCREW	M 8 X 30 DIN 933	2
22	015122	ELBOW	1/8NPT TO 45 DEG STREET (STEEL)	1
23	024844	ADAPTER	1/8 BSPT TO 1/8 NPT	1
25	031786	LOCKWASHER	M 8 DIN 127	2

Engine parts from Torrsen Marine - www.torresen.com - 231-759-8596

Engine parts from Torrsen Marine - www.torresen.com - 231-759-8596

PROPULSION INSTRUMENT PANELS

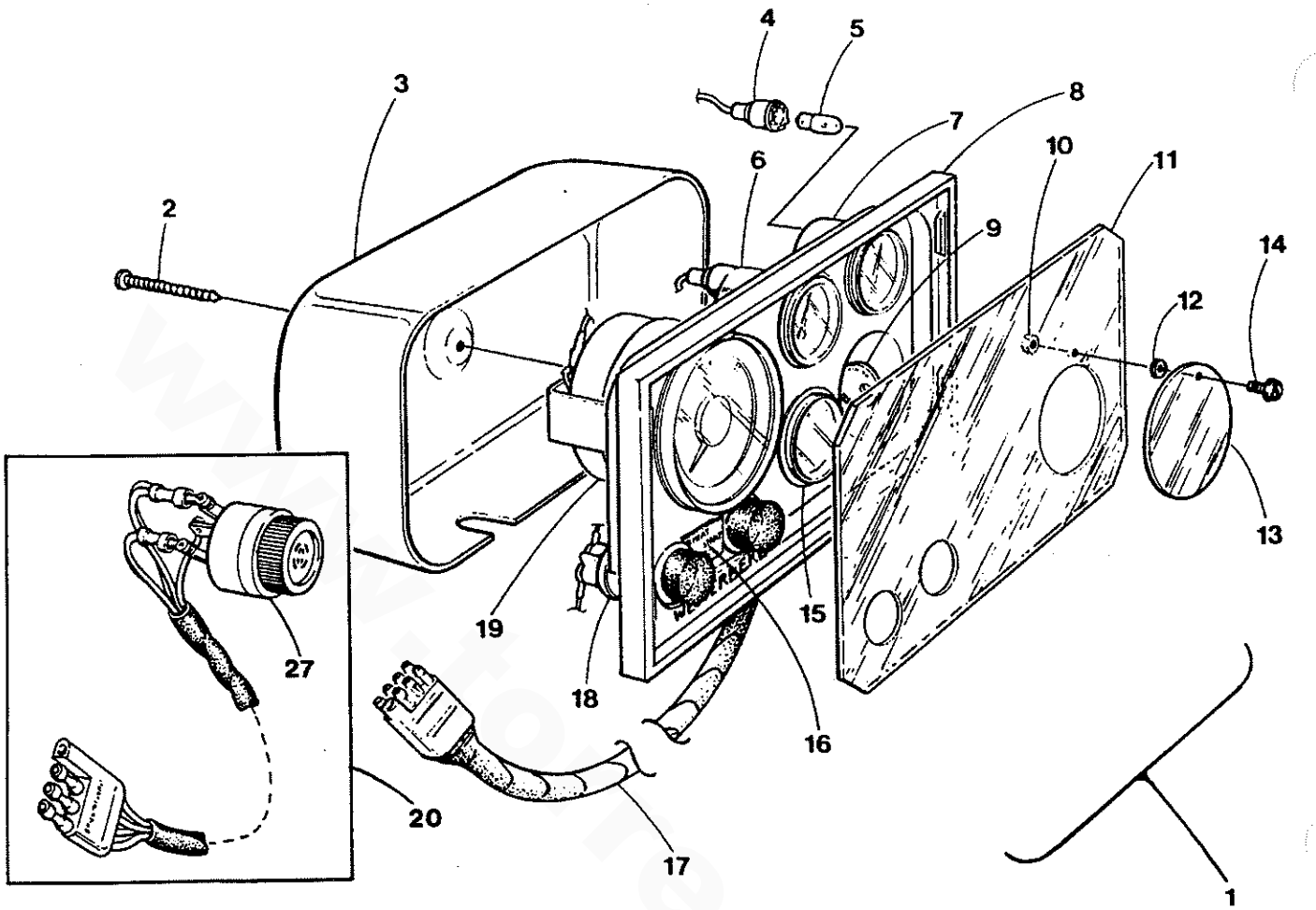

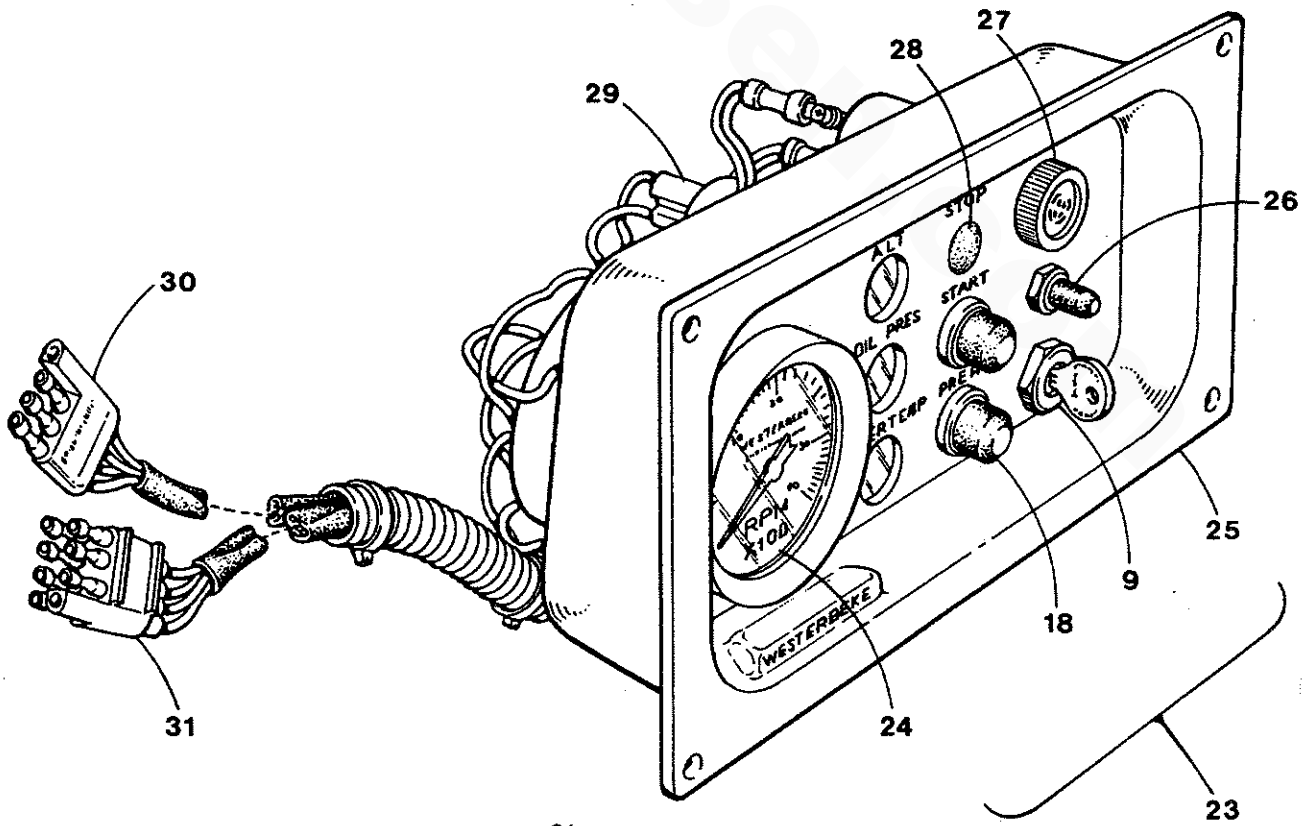

Engine parts from Torrsen Marine - www.torresen.com - 231-759-8596

Engine parts from Torrsen Marine - www.torresen.com - 231-759-8596

PROPULSION INSTRUMENT PANELS

Reference #	Part #	Part Name	Remarks	Quantity
1	200350	PANEL	ADMIRAL W/ALARM & SENDERS	1
2	030913	SCREW	SLOTTED PAN HEAD 10 X 2 SS	1
3	030119	COVER	PANEL REAR	1
5	042893	LAMP	INSTRUMENT 12VDC INCL HOLDER	3
6	037601	METER	WATER TEMPERATURE	1
7	037603	METER	OIL PRESSURE	1
8	039827	PANEL	PLATE	1
9	033693	KEYSWITCH	OFF/ON	1
10	030003	NUT	NYLON LOCKING 6-32	1
11	033684	COVER	FACEPLATE	1
12	030002	SPACER	NYLON	1
13	024996	WINDOW	KEYSWITCH COVER	1
14	030001	SCREW	NYLON 6-32 X 1/2 WASHER HD	1
15	037605	VOLTMETER	12VDC	1
16	033682	DECAL	SWITCH INDENTIFICATION	1
17	030148	CABLE	PANEL TO ENGINE 8 PIN	1
18-1	033764	SWITCH	PUSHBUTTON START/PREHEAT	2
18-2	019031	CAP	SWITCH COVER REPLACEMENT	2
19	011917	METER	TACHOMETER-HOUR	1
20	036829	ALARM	ASSEMBLY	1
21	035825	WIRE	POWER TO METER LAMPS	3
22	039144	DIAGRAM	WIRING ENGINE	1
23	200362	PANEL	CAPTAIN	1
24	036590	METER	TACHOMETER	1
25	039828	PANEL	PLATE	1
26-1	036479	SWITCH	TEST	1
26-2	036490	CAP	SWITCH	1
27	013355	BUZZER	ALARM	1
28	030946	PLUG	NYLON	1
29-1	024947	LAMP	12VDC	3
29-2	036483	HOLDER	LAMP	3
30	036626	HARNESS	PANEL TO ENGINE 4 PIN	1
31	036627	HARNESS	PANEL TO ENGINE 8 PIN	1
32	036477	TERMINAL-DIODE	ASSEMBLY	1
33	038049	SPACER	TERMINAL-DIODE ASSEMBLY	2
34	039769	PLATE	UNIVERSAL LOGO	1
35	200360	DIAGRAM	WIRING ENGINE - CATALINA	1
36	036630	DRAWING	TEMPLATE TO INSTALL EITHER PANEL	1

Engine parts from Torrsen Marine - www.torresen.com - 231-759-8596

Engine parts from Torrsen Marine - www.torresen.com - 231-759-8596

NOTES

www.torresen.com

Engine parts from Torrsen Marine - www.torresen.com - 231-759-8596

Engine parts from Torrsen Marine - www.torresen.com - 231-759-8596

MISCELLANEOUS

Reference #	Part #	Part Name	Remarks	Quantity
1	200522	KIT A	M-25XPB, M-35B, M-40B SPARE PARTS	1
2-1	201038	KIT B	M-25XPB - EXTENDED CRUISE	1
2-2	201039	KIT B	M-35B - EXTENDED CRUISE	1
2-3	201040	KIT B	M-40B- EXTENDED CRUISE	1
3-1	201030	GASKET SET	UPPER - M-25XPB	1
3-2	201029	GASKET SET	COMPLETE - M-25XPB	1
3-3	201034	GASKET SET	UPPER - M-35B	1
4-1	201032	GASKET SET	COMPLETE- M-35B	1
4-2	201035	GASKET SET	UPPER - M-40B	1
4-3	201037	GASKET SET	COMPLETE - M-40B	1
5	032974	FILTER	PRIMARY FUEL SEPERATOR	1
6	015010	STRAINER	RAW WATER	1
7	033327	VALVE	ANTI-SIPHON	1
8	302981	PAINT	BLUE AEROSOL SPRAY CAN	1
9	201016	KIT	FUEL HARDWARE	1
10-1	030760	HARNESS	15 FT. PANEL EXTENSION 8 PIN	1
10-2	036557	HARNESS	15 FT. PANEL EXTENSION 4 PIN	1
11	040078	FILTER KIT	REMOTE LUBE OIL	1
13	200550	MANUAL	OPERATOR - UNIVERSAL "B" SERIES	1
14	200554	MANUAL	SERVICE - M-25XPB/M-35B/M-40B	1
15	024177	KIT	REMOTE FRESH WATER SURGE TANK	1

Engine parts from Torrsen Marine - www.torresen.com - 231-759-8596

Engine parts from Torrsen Marine - www.torresen.com - 231-759-8596

Numerical Parts Index

Part #	Page	Ref
011386	25	14
011386	49	3
011405	25	3
011405	45	11
011405	51	11
011405	47	42
011471	25	18
011471	45	1
011779	51	10
011796	39	13
011885	25	17
011917	61	19
011925	13	33
013325	55	7
013325	51	30
013340	5	29
013340	7	29
013340	7	18
013340	43	11
013340	5	18
013341	1	11
013341	3	11
013348	13	32
013355	61	27
013619	59	21
013629	51	23
013629	5	25-2
013629	7	25-2
013630	53	53
013630	51	33
013630	55	1
013870	51	29
013870	55	6
013871	53	44
015010	63	6
015122	5	16
015122	7	16
015122	7	10
015122	5	10
015122	59	22
015774	45	10-2
015774	25	29
015812	13	28
015812	39	3
015812	13	21
016789	7	23-1
016789	5	23-1
016789	9	1-1
016789	11	1-1
017196	1	3-1
017196	3	3-1
017196	51	16
017196	27	20
017196	29	22
017298	43	5
017298	27	27
017298	29	29
018143	49	20
018145	49	18
018146	49	14
018242	59	16
018242	43	32
018242	51	41
018804	15	27-1
018804	17	28-1
018811	43	24
018811	51	36
018813	25	5
018813	53	51-2
019031	61	18-2
019039	51	35
019059	25	15
019059	49	4
019262	51	18
019262	53	54-2
019262	51	24
019262	29	23
019262	27	21
019262	43	20
019262	57	12
019262	3	15
019262	1	15
019262	5	13
019262	59	11
019262	51	6
019262	25	6
019262	7	13
019321	25	10
019369	45	7-2
019369	5	15
019369	7	15
020628	49	25
020628	45	35
020628	17	29-1
020628	15	28-1
020650	53	51
021485	43	4
021558	45	4-2
021878	25	35
022131	45	7-3
022513	43	3
022850	25	11
022851	25	9
022852	25	12
023652	51	21
023706	51	19-1
023707	51	19-2
023708	51	19-3
023709	51	19-4
023710	51	19-5
023711	51	19-6
023712	51	19-7
024132	59	9
024177	63	15
024306	25	2
024637	25	24
024639	43	14

Engine parts from Torrsen Marine - www.torresen.com - 231-759-8596

Engine parts from Torrsen Marine - www.torresen.com - 231-759-8596

Numerical Parts Index

Part #	Page	Ref
024683	43	27
024704	25	27-2
024786	25	26
024844	59	23
024844	5	8
024844	7	8
024858	25	25
024905	5	28
024905	7	28
024906	45	19
024906	25	28
024907	25	1
024922	7	27
024922	5	27
024947	61	29-1
024950	51	17
024951	3	16
024951	59	10
024951	5	14
024951	7	14
024951	1	16
024952	29	24
024952	51	7
024952	27	22
024953	53	49
024955	43	19
024955	53	55
024977	25	27
024996	61	13
030001	61	14
030002	61	12
030003	61	10
030119	61	3
030125	45	2
030146	13	15-1
030148	61	17
030181	55	5
030183	49	2
030475	57	9
030756	55	2
030756	51	34
030760	63	10-1
030848	5	5
030848	7	5
030913	61	2
030946	61	28
031228	51	20
031503	43	26
031503	13	35
031505	43	31
031555	27	29
031555	29	31
031555	57	5
031613	57	14
031750	43	8
031750	59	8
031752	13	36
031752	53	58
031752	39	10
031752	43	9
031752	59	7
031753	43	10
031753	5	26
031753	7	26
031753	43	30
031753	41	48
031753	39	9
031754	39	11
031754	53	57
031756	27	24
031756	29	26
031758	57	6
031758	43	13
031758	27	23
031758	29	25
031759	27	28
031759	29	30
031760	43	35
031760	43	12
031764	57	15
031765	57	16
031783	15	27-2
031783	29	44
031783	29	40
031783	45	36
031783	27	36
031783	45	31-2
031783	17	29-2
031783	17	28-2
031783	15	28-2
031783	57	2
031783	49	26
031783	45	24
031783	13	22
031783	23	18-2
031783	21	18-2
031783	13	16-2
031783	13	15-2
031783	39	4
031783	13	27
031784	45	6-1
031784	39	15
031786	51	40
031786	43	33
031786	51	32
031786	59	25
031786	7	23-2
031786	5	23-2
031786	59	17
031786	53	54-1
031786	51	15
031786	55	9
031786	45	5
031786	3	3-2
031786	1	3-2
031786	11	1-2
031786	9	1-2

Engine parts from Torrsen Marine - www.torresen.com - 231-759-8596

Engine parts from Torrsen Marine - www.torresen.com - 231-759-8596

Numerical Parts Index

Part #	Page	Ref
031786	29	21
031786	27	19
031787	45	6-2
031787	53	48
031789	25	7
031789	5	12
031789	7	12
031789	59	12
031789	57	13
031789	43	21
031789	53	50
031789	51	5
031822	57	11
031824	45	25
031824	57	1
031828	1	14
031828	3	14
031828	53	46
031843	43	23
031847	55	3
031847	59	3
031847	45	9
031847	43	15
031847	51	26
031849	43	16
031849	51	27
031849	55	4
031849	59	2
031849	45	8
031873	55	8
031873	51	31
031904	59	4
031935	25	37
032161	51	28
032175	13	13
032183	49	19
032480	5	11
032480	7	11
032480	59	14
032974	63	5
033381	57	7
033482	53	56
033482	39	8
033682	61	16
033684	61	11
033693	61	9
033764	61	18-1
034212	57	8
034212	45	26
034398	45	31-1
034472	59	6-2
034565	57	19
034663	13	38
035109	59	1
035109	45	7-1
035747	25	34-2
035785	33	6
035785	5	7
035785	7	7
035785	31	6
035789	13	20
035789	5	25-1
035789	7	25-1
035790	45	4-1
035799	35	29
035799	37	29
035799	39	23
035800	39	17-1
035800	35	35
035800	37	35
035800	45	17
035825	61	21
036425	25	32
036477	61	32
036479	61	26-1
036483	61	29-2
036490	61	26-2
036493	5	4
036493	7	4
036541	25	31
036557	63	10-2
036563	43	18
036590	61	24
036614	25	13
036614	51	14
036614	25	33-1
036616	25	33-2
036622	51	12
036626	61	30
036627	61	31
036630	61	36
036647	5	6
036647	7	6
036823	5	3
036823	7	3
036829	61	20
036849	25	34-1
036869	27	12
036869	29	13
036918	13	39
037323	59	13
037323	5	17
037323	7	17
037393	7	2
037393	5	2
037601	61	6
037603	61	7
037605	61	15
038049	61	33
038500	39	17-2
039140	43	6-1
039140	43	6-2
039140	27	30
039140	29	32
039144	61	22
039275	43	7
039385	5	9

Engine parts from Torrsen Marine - www.torresen.com - 231-759-8596

Engine parts from Torrsen Marine - www.torresen.com - 231-759-8596

Numerical Parts Index

Part #	Page	Ref
039385	7	9
039385	59	20
039769	61	34
039806	43	17
039827	61	8
039828	61	25
039874	27	38
039874	29	43
040036	51	13
040073	13	37
040074	13	34
040075	13	31
040078	13	29
040078	63	11
040384	27	11
040384	29	12
040384	43	28
040510	3	19
040510	53	47
040510	1	19
040622	27	13
040622	29	15
040966	1	13
040966	3	13
040966	53	45
041017	59	5-1
041017	57	10-1
041424	45	30-2
042175	49	1
042175	45	39
042225	27	17
042225	29	19
042225	43	34
042289	25	36
042296	25	21-2
042296	25	21-1
042893	61	5
043065	31	1
043065	33	1
043065	21	16
043065	23	16
043066	21	17
043066	23	17
043066	45	30-1
043480	43	22
044098	57	4
044098	45	22
044497	35	28
044497	37	28
044624	51	8
045545	41	47
200175	49	6
200176	49	30
200258	43	25
200260	59	15-1
200268	59	15-2
200333	51	25-1
200350	61	1
200360	61	35
200362	61	23
200365	51	37
200371	51	25-2
200418	49	28
200418	45	40
200419	49	27
200419	45	37
200421	25	16-1
200422	45	3-1
200428	45	10-1
200429	21	7
200429	23	7
200432	25	23-2
200432	25	23-1
200433	51	42
200434	53	43
200435	1	17
200435	3	17
200436	57	17
200438	57	3
200438	45	23
200439	25	16-2
200442	3	18
200442	1	18
200443	51	9
200444	51	4
200446	25	20-1
200446	25	20-2
200456	1	35
200457	3	35-1
200486	25	30-2
200488	25	30-1
200502	45	3-2
200503	47	44
200522	63	1
200536	49	17
200546	59	19-2
200550	63	13
200554	63	14
200573	27	34
200574	27	33
200575	27	32
200595	43	1-1
200595	43	1-2
200617	27	16
200617	29	18
200624	13	23-1
200625	39	27
200626	35	1
200628	15	20
200630	39	7-2
200631	13	7-2
200632	7	24
200633	13	6-2
200634	17	20
200635	23	2
200636	1	28
200637	37	8

Engine parts from Torrsen Marine - www.torresen.com - 231-759-8596

Engine parts from Torrsen Marine - www.torresen.com - 231-759-8596

Numerical Parts Index

Part #	Page	Ref
200641	1	34
200641	3	34
200642	13	9
200644	31	13
200644	33	13
200645	31	11
200645	33	11
200646	31	8
200646	33	8
200647	35	17
200647	37	17
200648	39	38-2
200649	41	42-2
200650	41	41-3
200673	39	16
200676	15	12-2
200676	17	12-2
200677	15	12-3
200677	17	12-3
200689	13	19
200696	31	10
200697	9	3
200698	27	35
200701	27	7
200701	29	8
200702	29	11
200702	27	10
200703	27	8
200703	29	9
200704	27	9
200704	29	10
200705	33	10
200706	29	36
200707	29	35
200708	29	34
200709	11	3-1
200710	15	4-1
200710	17	4-1
200711	15	4-2
200711	17	4-3
200712	11	3-2
200713	17	4-2
200714	17	4-4
200715	29	37
200716	39	37
200717	39	34-1
200718	39	34-2
200719	39	33-1
200720	39	33-2
200721	39	38-1
200721	41	49
200722	3	29
200724	3	28
200725	3	5
200726	39	30-2
200727	39	20
200728	7	1
200729	3	26
200730	57	20-1
200731	9	11
200732	15	15-1
200733	11	2
200734	11	9
200734	9	9
200735	9	4
200735	11	4
200736	15	33
200736	19	34
200737	13	18
200738	17	27
200738	15	26
200739	19	33
200739	15	32
200739	15	22
200739	17	22
200740	15	25
200740	17	26
200741	51	1
200742	15	29
200742	19	30
200743	21	11
200743	23	11
200744	21	9
200744	23	9
200745	21	12
200745	23	12
200747	21	8
200747	23	8
200748	21	10
200748	23	10
200749	23	15
200750	35	19
200750	37	20
200751	37	19
200751	35	20
200753	9	5
200753	11	5
200754	9	6
200754	11	6
200755	35	6
200756	37	6
200757	35	4
200757	37	4
200758	35	5
200758	37	5
200759	37	12
200760	35	11
200760	37	11
200761	37	7
200761	35	7
200763	35	3
200763	37	3
200764	35	2
200765	23	3
200766	23	4
200767	35	23
200767	37	23

Engine parts from Torrsen Marine - www.torresen.com - 231-759-8596

Engine parts from Torrsen Marine - www.torresen.com - 231-759-8596

Numerical Parts Index

Part #	Page	Ref
200768	35	26
200768	37	26
200769	31	7
200769	33	7
200770	35	27
200770	37	27
200771	15	3
200771	17	3
200772	15	2
200772	17	2
200773	15	6
200773	17	6
200774	15	5
200774	17	5
200775	17	8
200775	15	8
200776	17	7-1
200776	15	7-1
200777	15	7-2
200777	17	7-2
200778	15	7-3
200778	17	7-3
200779	17	15-1
200780	15	21
200780	17	21
200781	17	14
200781	15	14
200782	15	17-1
200782	17	17-1
200783	15	9-1
200783	17	9-1
200784	15	11-1
200785	17	11-2
200785	15	11-2
200786	15	11-3
200786	17	11-3
200787	15	17-2
200787	17	17-2
200788	15	17-3

Part #	Page	Ref
200788	17	17-3
200789	15	9-2
200789	17	9-2
200790	15	9-3
200790	17	9-3
200791	15	18
200791	17	18
200792	35	36
200792	37	36
200793	35	30
200793	37	30
200794	35	34
200794	37	34
200795	35	31
200795	37	31
200796	53	52
200797	1	31
200797	3	31
200798	13	3
200799	13	4
200800	15	19
200800	17	19
200801	13	10
200802	13	8
200803	33	3
200803	31	3
200804	31	4
200804	33	4
200805	39	40
200806	31	18
200806	33	18
200807	31	20
200807	33	20
200808	31	21
200808	33	21
200809	31	22
200809	33	22
200810	33	17
200810	31	17

Part #	Page	Ref
200811	33	16
200811	31	16
200812	31	14
200812	33	14
200813	39	29
200814	39	26
200815	39	24
200816	39	28
200817	39	36
200818	39	6
200819	47	43
200820	45	27
200821	45	33
200822	45	21
200823	45	20-1
200824	45	18
200825	45	34
200826	45	28
200827	45	29
200828	57	18
200829	57	21
200830	13	17
200831	31	2
200831	33	2
200832	13	5
200833	31	9
200833	33	9
200834	27	39
200834	29	42
200835	3	8
200835	1	8
200836	13	14
200837	1	27
200837	3	27
200838	13	23-2
200839	39	18-2
200839	13	24-2
200840	57	20-2
200841	17	25-2

Engine parts from Torrsen Marine - www.torresen.com - 231-759-8596

Engine parts from Torrsen Marine - www.torresen.com - 231-759-8596

Numerical Parts Index

Part #	Page	Ref
200842	17	24-2
200843	21	14
200844	21	15
200845	25	22-1
200846	35	12
200847	21	3
200848	21	4
200849	35	24
200849	37	24
200850	35	22
200851	17	1-2
200852	17	1-4
200853	27	42
200854	1	29
200855	39	32-1
200856	43	2-1
200857	45	32
200858	13	2
200859	15	31
200859	19	32
200860	15	30
200860	19	31
200861	13	25
200862	39	22
200863	45	16
200866	31	15
200867	11	10-1
200868	13	1
200869	15	24
200869	17	25-1
200870	15	23
200870	17	24-1
200871	17	23-1
200872	23	14
200873	35	16
200873	37	16
200874	37	22
200875	17	1-1
200875	15	1-1
200876	17	1-3
200876	15	1-2
200877	35	33
200877	37	33
200878	35	32
200878	37	32
200879	29	14
200880	27	3
200880	29	3
200881	27	4
200881	29	4
200882	27	5
200882	29	5
200883	29	6
200884	33	15-2
200885	1	23
200885	3	23
200886	31	12
200886	33	12
200887	39	19
200888	39	30-1
200889	39	32-2
200890	39	1-1
200891	39	5
200892	39	14
200893	39	21
200894	43	2-2
200895	15	16
200895	17	16
200896	1	7
200896	3	7
200897	31	5
200897	33	5
200898	17	23-2
200899	17	15-2
200900	7	22
200901	5	1
200903	33	15-1
200904	31	23
200904	33	23
200905	1	2
200905	3	2
200906	1	22
200906	3	22
200907	41	43
200908	41	44
200909	39	31
200910	11	10-2
200911	17	11-1
200912	25	22-2
200913	39	25
200914	39	1-2
200916	1	1
200916	3	1
200948	59	19-1
200949	45	14-2
200950	51	3-2
200952	45	14-1
200956	1	10
200956	3	10
200957	51	3-1
200961	45	41
200978	1	20
200978	3	20
201000	45	15
201001	45	13-2
201002	31	19
201002	33	19
201002	39	35
201003	5	19
201004	7	19
201008	7	20
201023	41	46
201025	25	4-1
201026	25	4-2
201027	25	8
201028	3	35-2
201029	63	3-2

Engine parts from Torrsen Marine - www.torresen.com - 231-759-8596

Engine parts from Torrsen Marine - www.torresen.com - 231-759-8596

Numerical Parts Index

Part #	Page	Ref
201030	63	3-1
201032	63	4-1
201034	63	3-3
201035	63	4-2
201037	63	4-3
201038	63	2-1
201039	63	2-2
201040	63	2-3
201041	5	22
239457	21	5
239457	23	5
298539	51	38
298658	3	25
298658	1	25
298659	3	24
298659	1	24
298660	5	21
298660	7	21
298680	39	7-1
298738	13	6-1
298740	21	2
298794	27	1
298794	29	1
298843	45	12-2
298853	27	26
298853	29	28
298854	27	25
298854	29	27
299355	1	6
299355	3	6
299360	1	5
299362	11	12
299362	9	13
299362	1	30
299362	3	30
299365	39	17-3
299371	5	20
299440	35	14
299440	37	14
299442	35	13
299442	37	13
299445	35	18
299445	37	18
299446	37	9
299446	35	9
299447	35	8
299459	21	6
299459	23	6
299559	13	7-1
299830	43	29
299855	27	45
299855	29	45
299856	27	46
299856	29	46
299864	39	12
299906	11	8
299906	9	10
299942	51	22-4
299967	5	24
300103	27	18
300103	29	20
300115	51	22-1
300116	51	22-2
300117	51	22-3
300156	35	10
300156	37	10
300172	51	2
300209	13	11
300236	45	20-2
300237	45	12-1
300330	13	16-1
300330	21	18-1
300330	23	18-1
300716	1	21
300716	3	21
300746	59	5-2
300746	57	10-2
301037	51	39
301201	1	4
301201	3	4
301241	39	17-4
301241	29	38
301241	27	40
301241	39	41-1
301241	39	41-2
301241	41	45
301255	37	2
301256	37	1
301297	1	32
301297	3	32
301299	27	14
301299	29	16
301300	29	39
301300	27	41
301303	27	15
301303	29	17
301306	27	6
301306	29	7
301307	27	2
301307	29	2
301312	29	33
301312	27	31
301313	27	37
301313	29	41
301358	45	13-1
301399	23	13
301399	21	13
301490	13	12
301498	39	2
301507	39	18-1
301507	13	24-1
301543	1	26
301549	9	2
301550	9	7
301568	35	25
301581	41	42-1
301713	35	21

Engine parts from Torrsen Marine - www.torresen.com - 231-759-8596

Engine parts from Torrsen Marine - www.torresen.com - 231-759-8596

Numerical Parts Index

Part #	Page	Ref
301713	37	21
301729	1	33
301729	3	33
301780	17	10-1
301780	15	10-1
302181	23	19
302181	21	19
302217	49	29
302391	47	45
302453	35	15
302453	37	15
302470	17	13
302470	15	13
302542	15	10-3
302542	17	10-3
302587	1	12
302587	3	12
302589	1	9
302589	3	9
302593	9	12
302593	11	11
302612	17	12-1
302612	15	12-1
302613	15	10-2
302613	17	10-2
302678	49	22
302678	45	38
302690	11	7
302690	9	8
302707	21	1
302707	23	1
302744	13	26
302746	39	39
302746	41	50
302842	13	30
302866	49	13
302871	49	23
302872	49	24
302874	49	16
302876	49	9
302877	49	5
302878	49	7
302879	49	8
302880	49	11
302881	49	12
302884	49	15
302885	49	10
302981	63	8
303107	59	18
303109	59	6-1
303147	25	19
303172	49	21

Engine parts from Torrsen Marine - www.torresen.com - 231-759-8596